REV.	DESCRIPTION	DRAWN	DATE
		APPD.	DATE

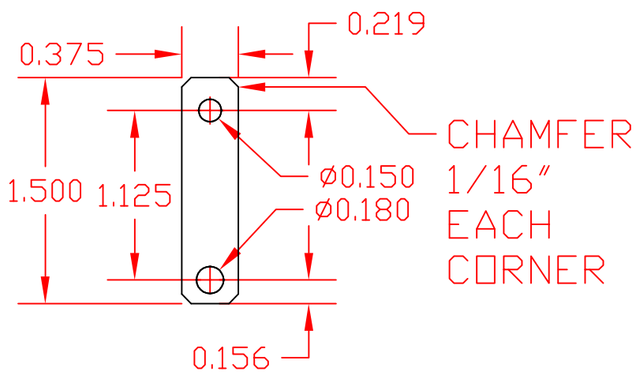

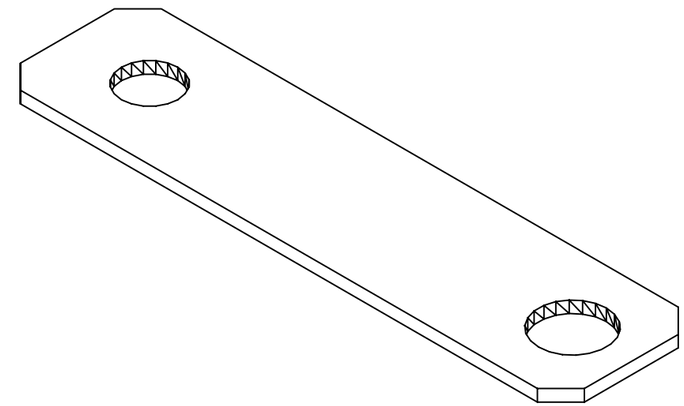

NOTE: FINISH WITH BRIGHT TIN PLATING 0.0005″ MIN.

ITEM	PART NO.	DESCRIPTION OR SIZE	QTY.
PARTS LIST			

UNLESS OTHERWISE SPEC.			ORIGINATOR	D. L. HUFFMAN
FRACTIONS	DECIMALS	ANGLES	DRAWN	
			CHECKED	
			APPROVED	
			USED ON	
			MATERIAL-	OFHC COPPER 1/32″

FERMI NATIONAL ACCELERATOR LABORATORY
UNITED STATES DEPARTMENT OF ENERGY

BLS CRATE GROUND TAB

SCALE	FILMED	DRAWING NUMBER	REV.
		3740.412-MB-286043	