REV.	DESCRIPTION	DRAWN	DATE
		APPD.	DATE

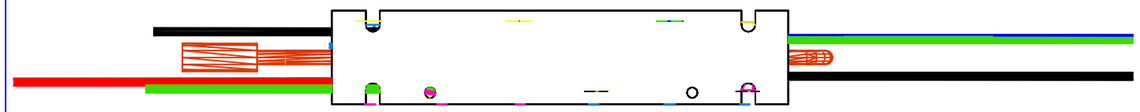

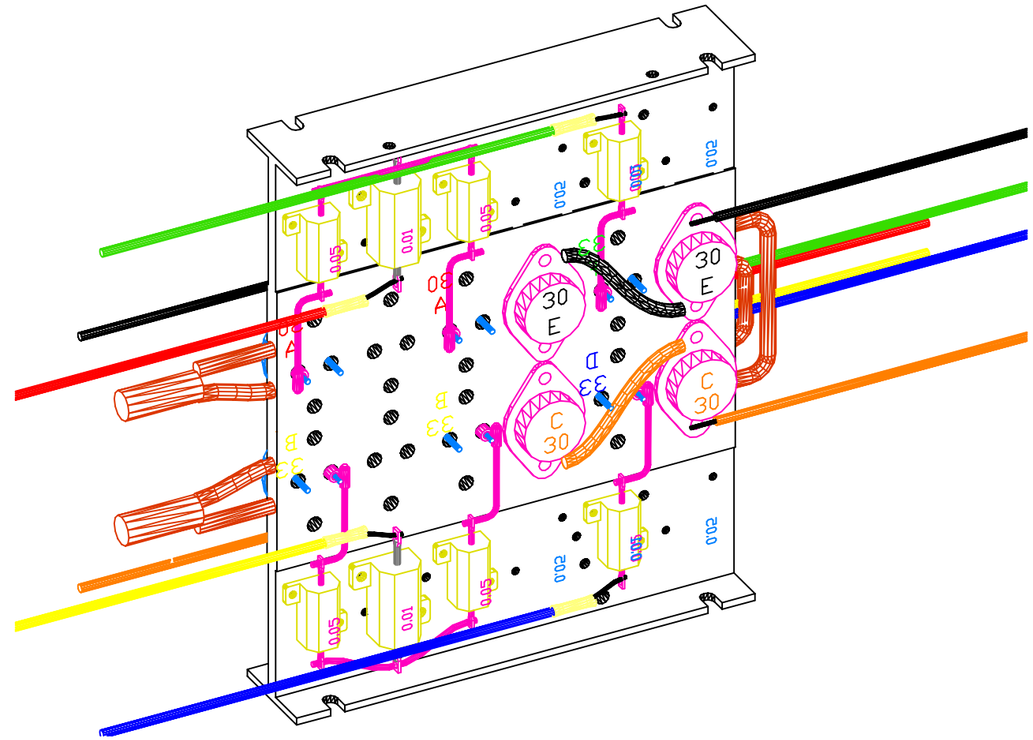

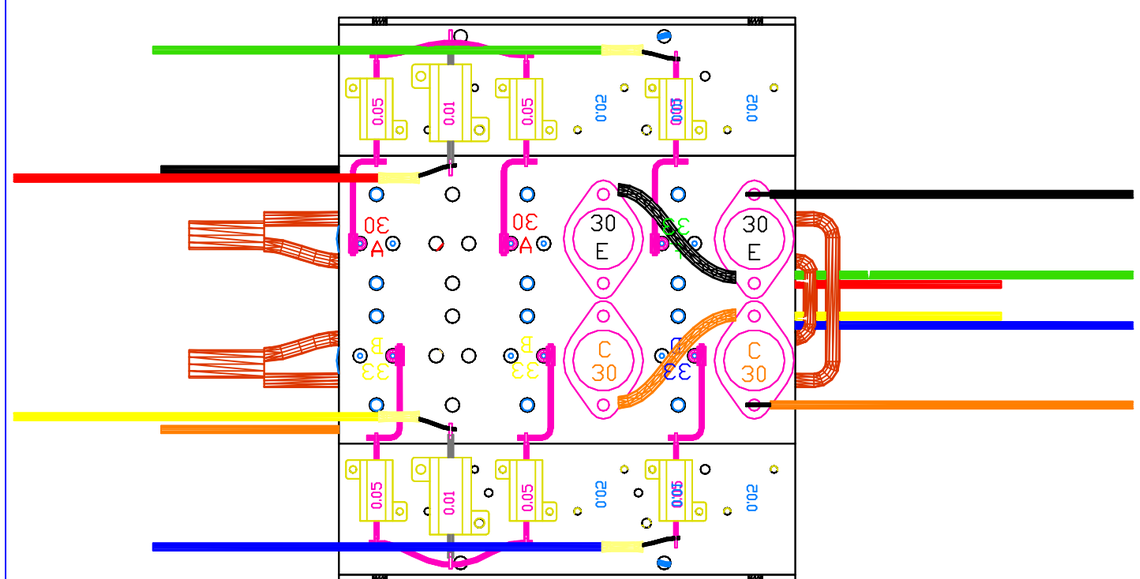

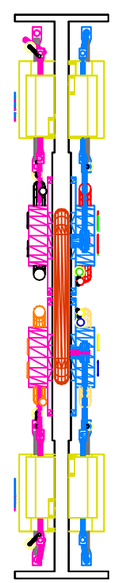

ITEM	PART NO.	DESCRIPTION OR SIZE	QTY.
PARTS LIST			

UNLESS OTHERWISE SPEC.			ORIGINATOR	D. L. HUFFMAN	12/07/2001
FRACTIONS	DECIMALS	ANGLES	DRAWN		
			CHECKED		
			APPROVED		
			USED ON		
			MATERIAL–		

FERMI NATIONAL ACCELERATOR LABORATORY
UNITED STATES DEPARTMENT OF ENERGY

D0 SYSTEMS LOW VOLTAGE P.S.

BLS PASS TRANSISTOR LAYOUT LEFT

SCALE	FILMED	DRAWING NUMBER	REV.
		3740.412-MB-286046	