REV.	DESCRIPTION	DRAWN	DATE
		APPD.	DATE

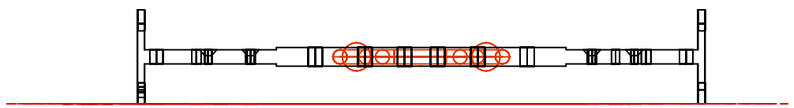

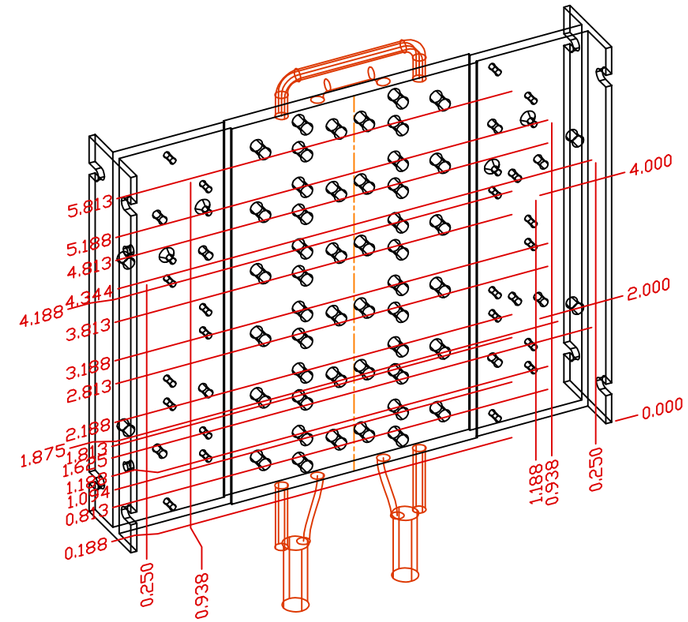

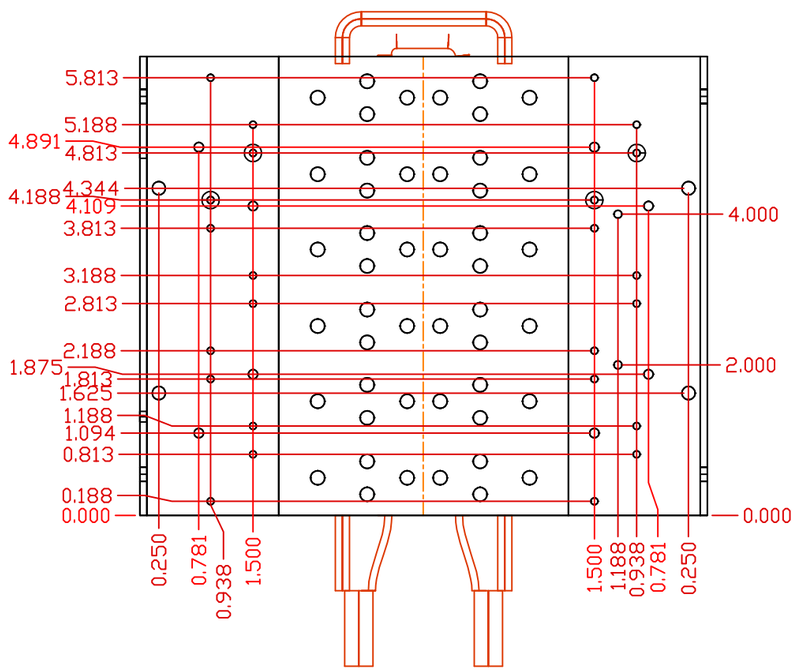

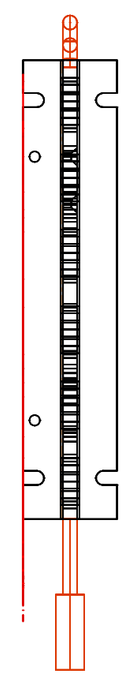

ITEM	PART NO.	DESCRIPTION OR SIZE	QTY.
		PARTS LIST	

UNLESS OTHERWISE SPEC.	DESIGNED	D. L. HUFFMAN	12/6/2001
FRACTIONS / DECIMALS / ANGLES	DRAWN		
	CHECKED		
	APPROVED		
	USED ON		
	MATERIAL:-		

FERMI NATIONAL ACCELERATOR LABORATORY
UNITED STATES DEPARTMENT OF ENERGY

D0 SYSTEMS LOW VOLTAGE P.S.
OUTPUT MODULE LEFT MODIFICATION

SCALE	FILMED	DRAWING NUMBER	REV.
		3740.412-MD-286016	