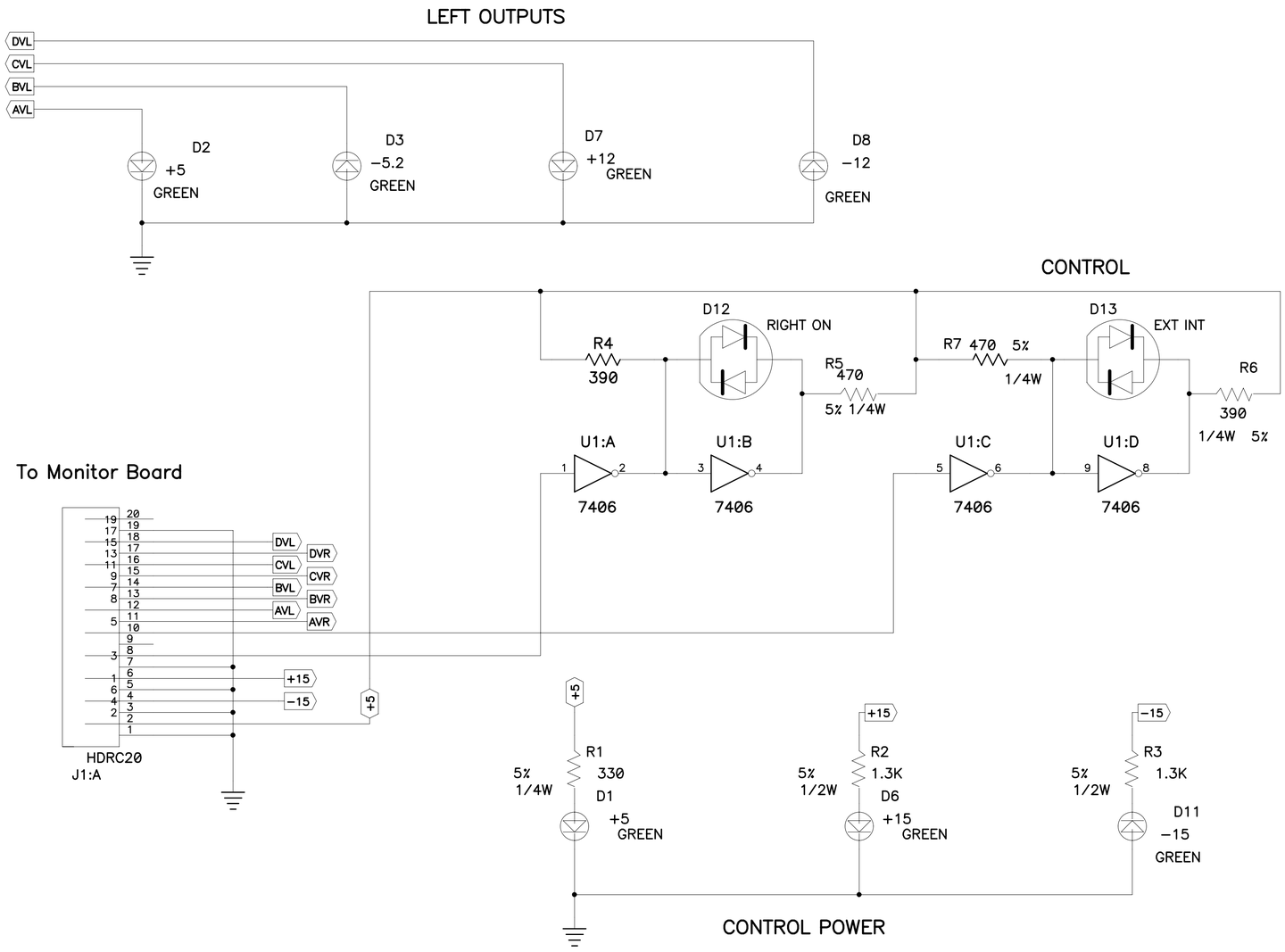

Title	CETEC DISPLAY BOARD	
Size C	Number 3740.412−ED−286116	Rev A
Date 2001 12 27		Drawn by DAVID L. HUFFMAN
Filename displayc.sch		Sheet 1 of 1