REVISIONS				
ZONE	REV	DESCRIPTION	DATE	APPROVED

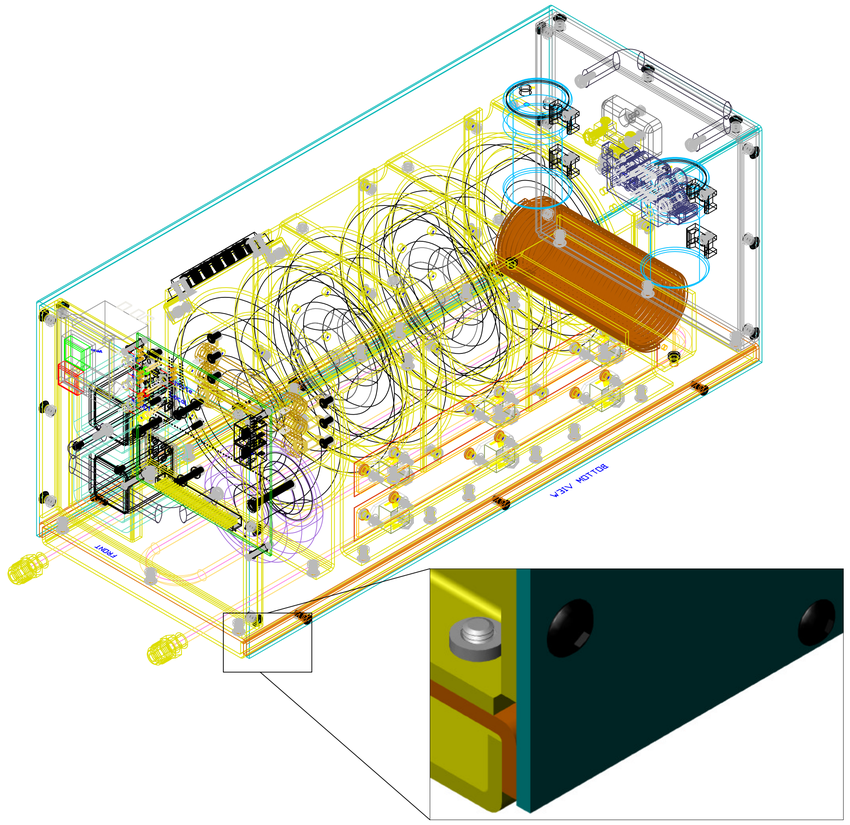

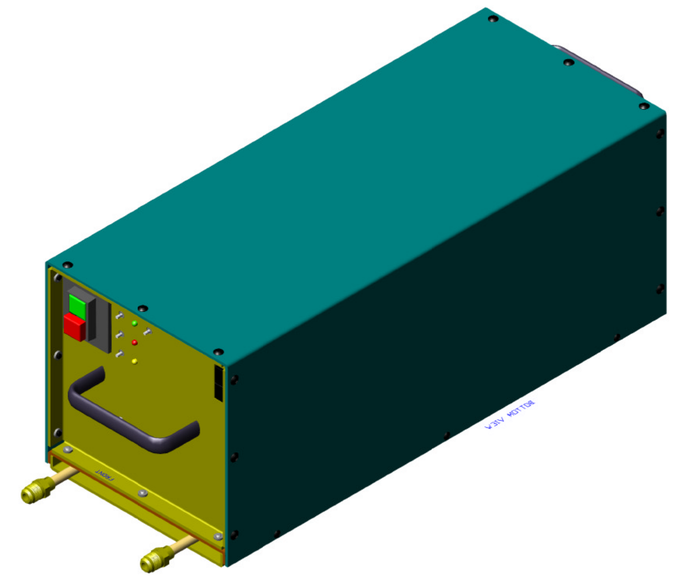

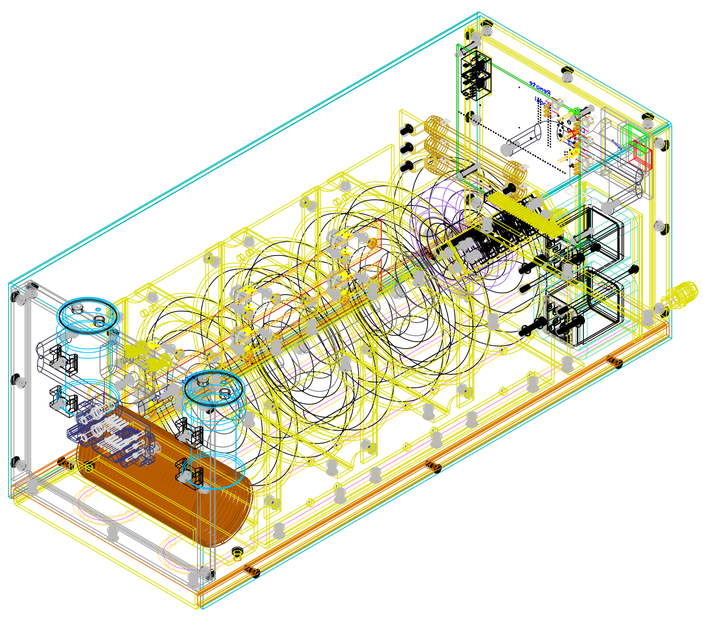

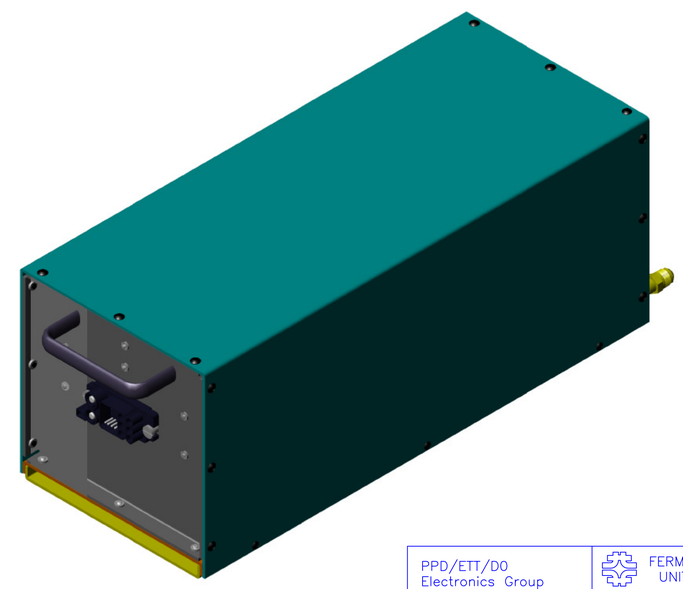

PPD/ETT/DO Electronics Group David L. Huffman	FERMI NATIONAL ACCELERATOR LABORATORY UNITED STATES DEPARTMENT OF ENERGY
	US_CMS ECAL/Tracker AC-DC Converter 3000W Power Supply Chassis Assembly
Sept. 16, 2004	SIZE / FSCM NO. / DWG NO. 3892.136-MD-330512 / REV A
chassis_assm.dwg	SCALE 1:1 / SHEET 1 of 1