REVISIONS				
ZONE	REV	DESCRIPTION	DATE	APPROVED
	B	Add Components		

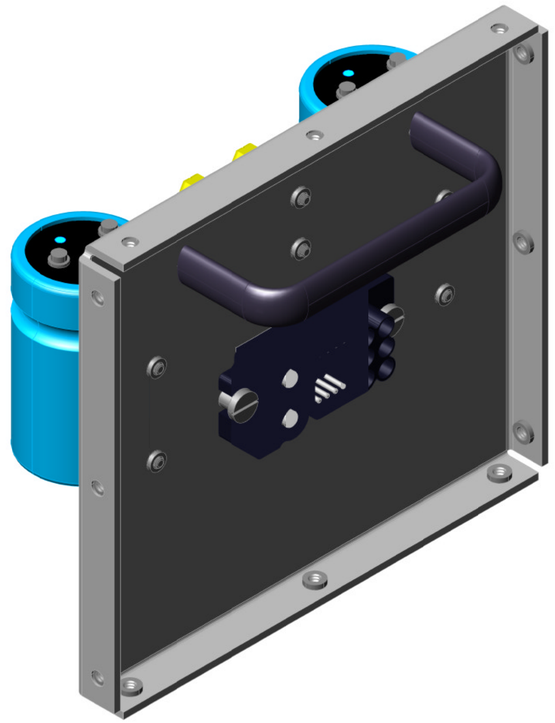

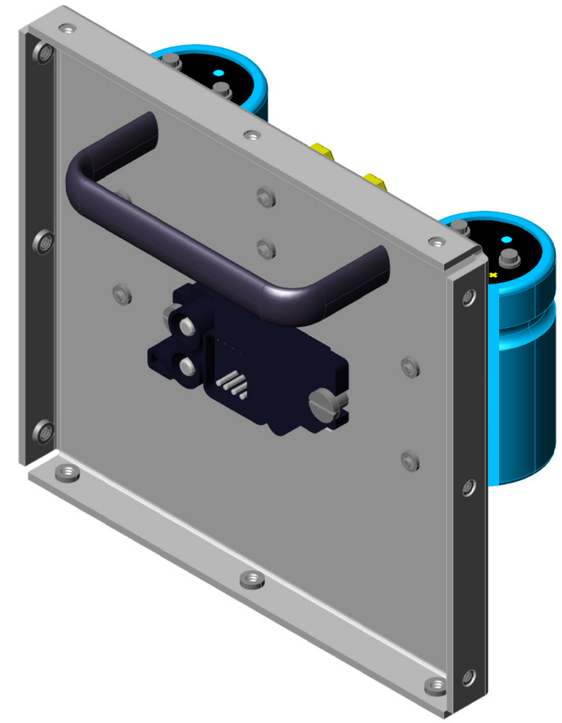

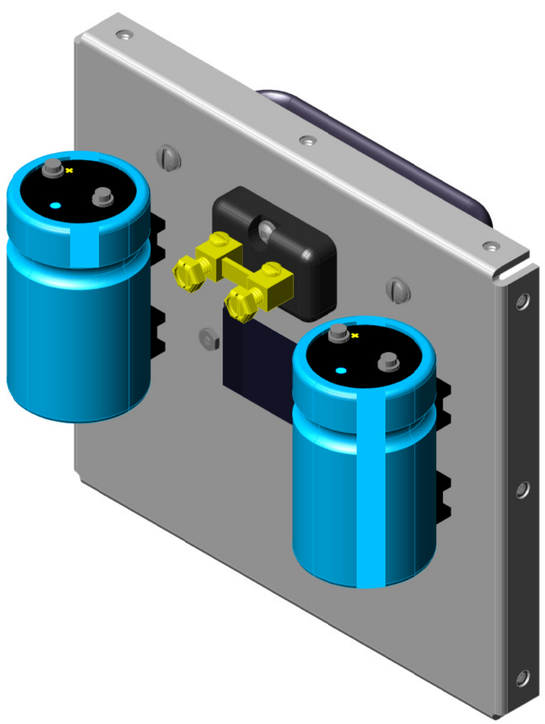

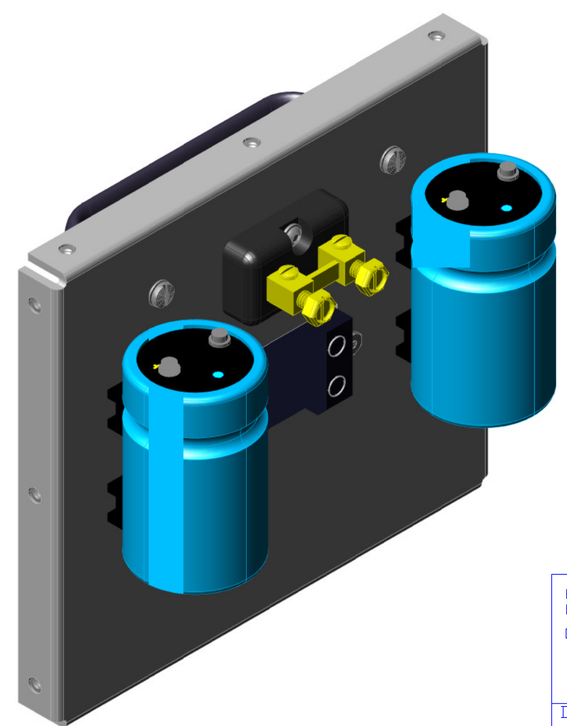

PPD/ETT/DO
Electronics Group

David L. Huffman

FERMI NATIONAL ACCELERATOR LABORATORY
UNITED STATES DEPARTMENT OF ENERGY

US_CMS ECAL/Tracker AC-DC
Converter 3000W Power Supply
Back Panel Assembly

Dec. 27, 2004

back_panel_assm.dwg

SIZE	FSCM NO.	DWG NO.	REV
		3892.136-MD-330514	B

SCALE 1:1

SHEET 1 of 1