REVISIONS				
ZONE	REV	DESCRIPTION	DATE	APPROVED

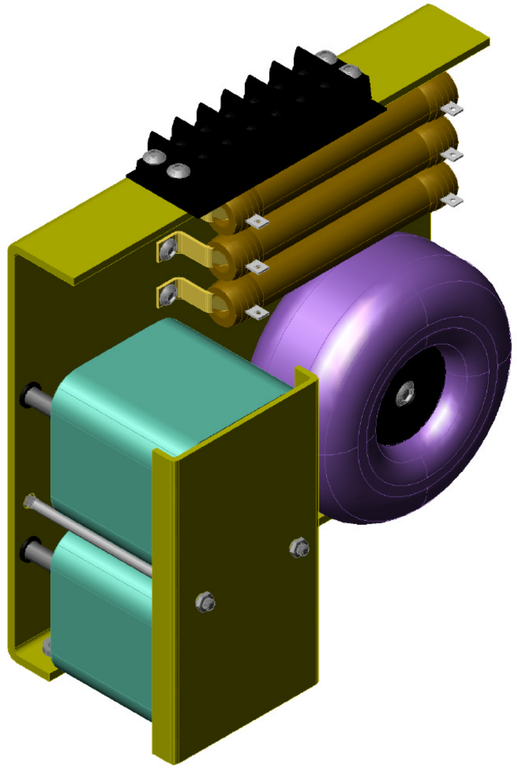

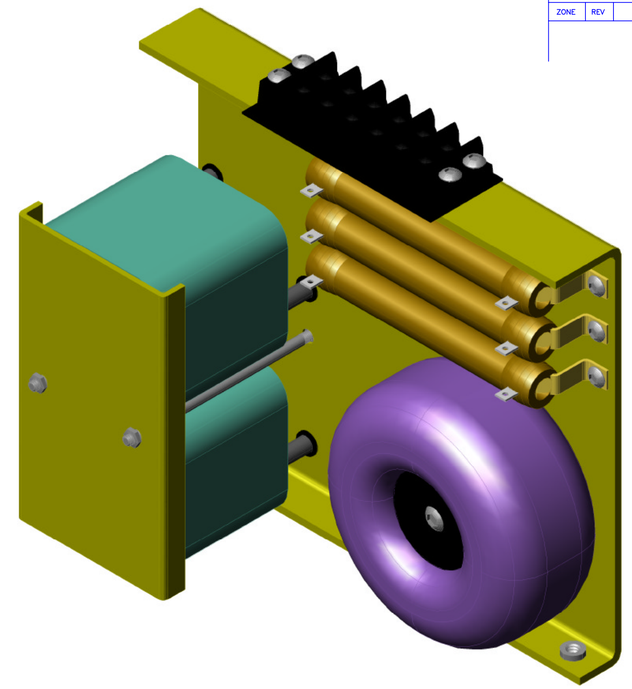

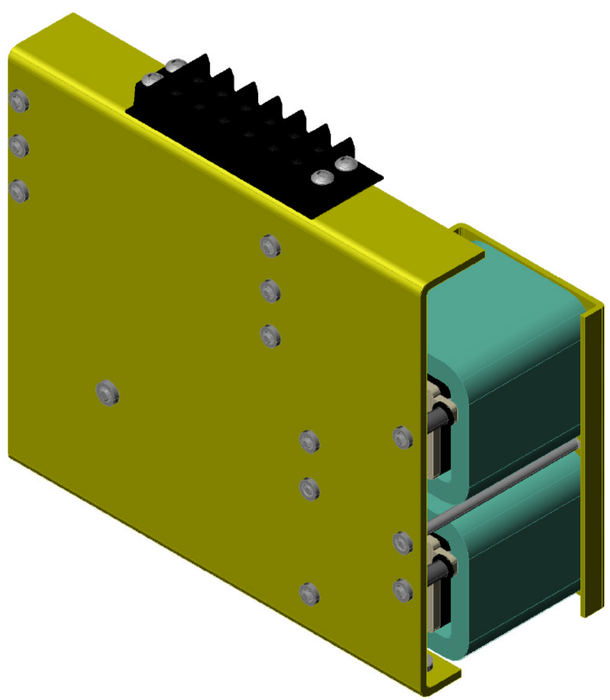

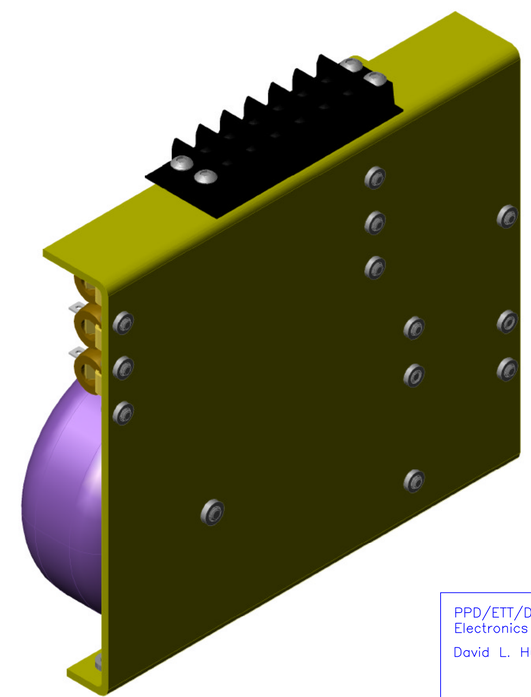

PPD/ETT/DO
Electronics Group

David L. Huffman

FERMI NATIONAL ACCELERATOR LABORATORY
UNITED STATES DEPARTMENT OF ENERGY

US_CMS ECAL/Tracker AC-DC
Converter 3000W Power Supply
Control Assembly

Dec. 09, 2004	SIZE	FSCM NO.	DWG NO. 3892.136-MD-330517	REV A
control_assm.dwg	SCALE 1:1			SHEET 1 of 1