REVISIONS				
ZONE	REV	DESCRIPTION	DATE	APPROVED
	B	Changed Transformer Flange direction		

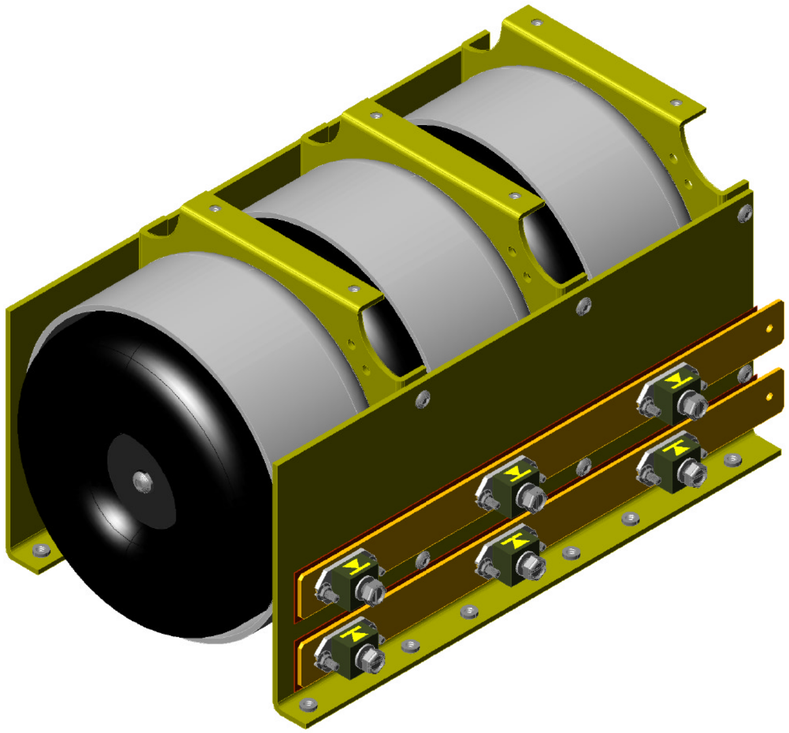

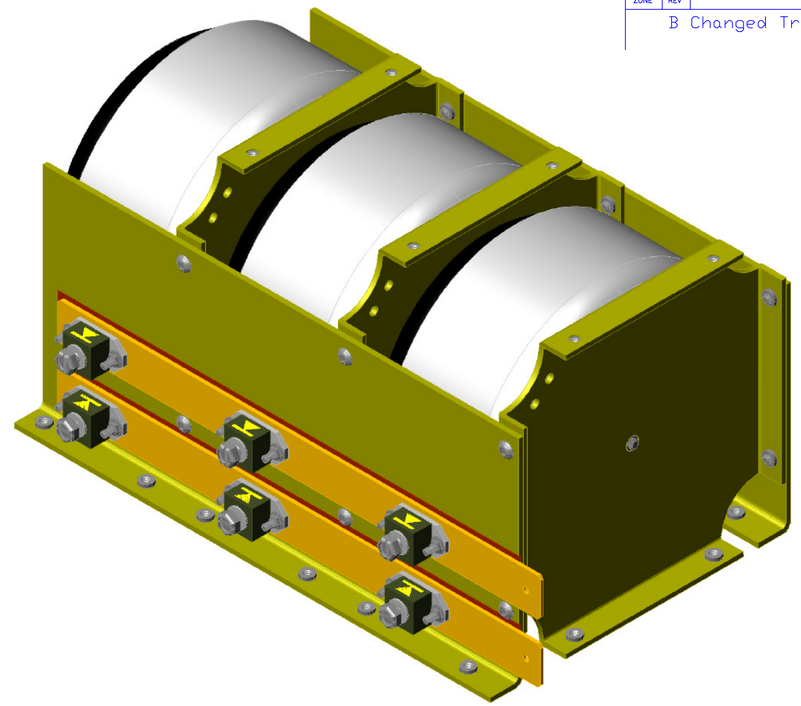

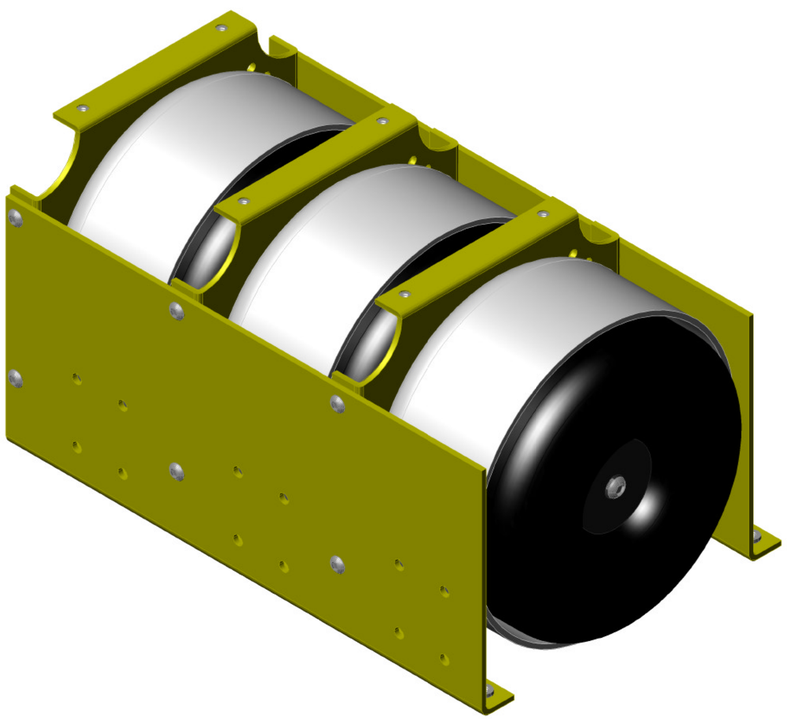

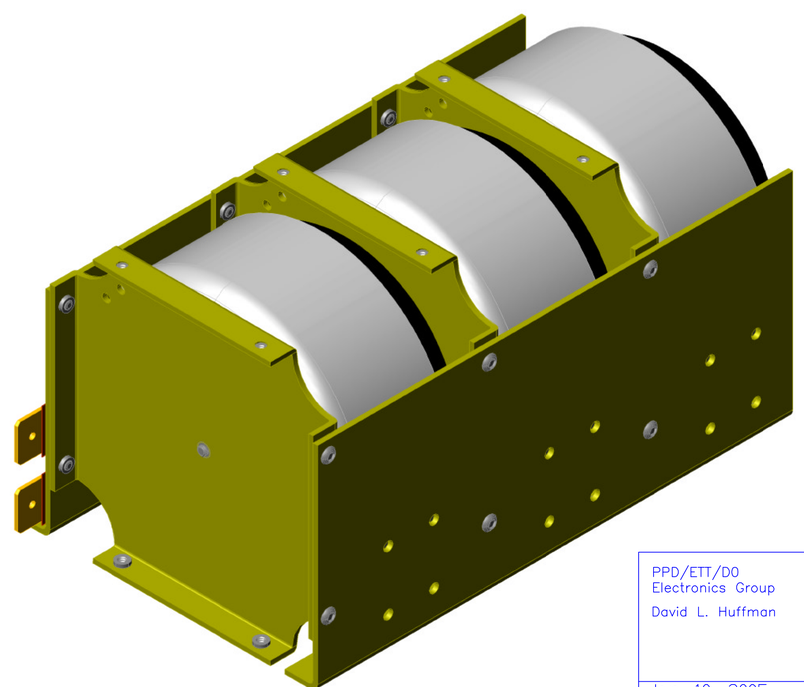

PPD/ETT/DO
Electronics Group

David L. Huffman

FERMI NATIONAL ACCELERATOR LABORATORY
UNITED STATES DEPARTMENT OF ENERGY

US_CMS ECAL/Tracker AC-DC
Converter 3000W Power Supply

AC-DC Core Assembly

Jan. 10, 2005	SIZE	FSCM NO.	DWG NO. 3892.136-MD-330522	REV B
coreassm.dwg	SCALE 1:1		SHEET 1 of 1	