REVISIONS				
ZONE	REV	DESCRIPTION	DATE	APPROVED
	B	Changed hole spacing Jan 14 2005		

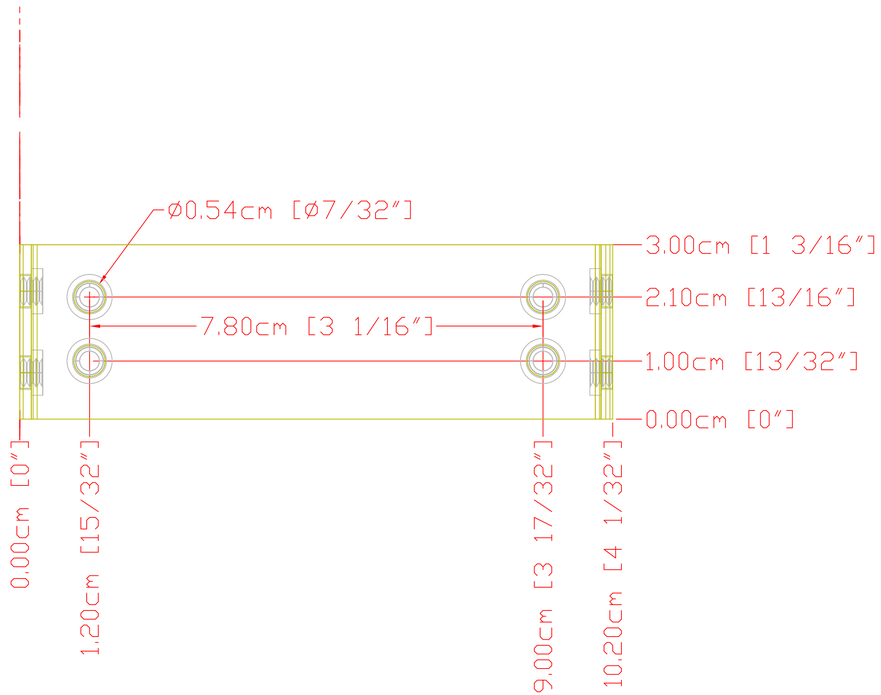

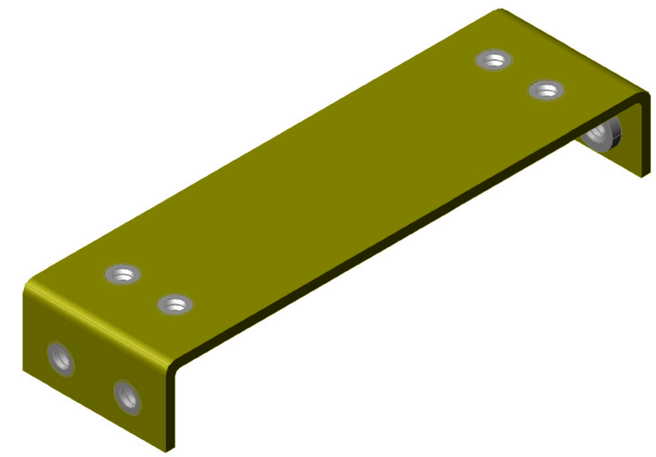

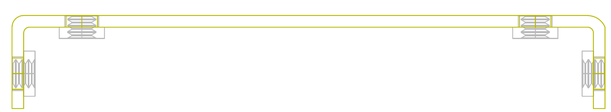

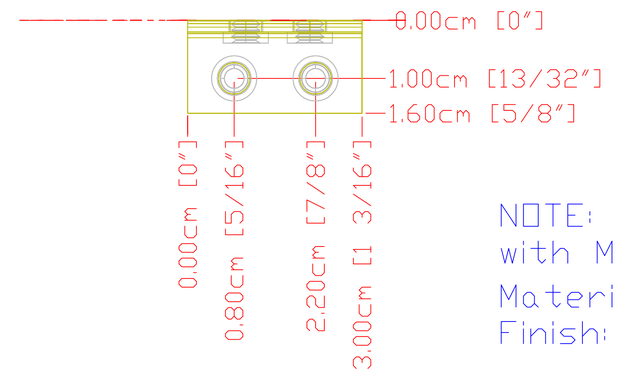

NOTE: All holes are 5.4mm clearance with M4x0.7 Self-Clinching Nuts

Material: $\frac{1}{16}$"6061-T4 Aluminum

Finish: Gold Iriditing

PPD/ETT/DO
Electronics Group

David L. Huffman

FERMI NATIONAL ACCELERATOR LABORATORY
UNITED STATES DEPARTMENT OF ENERGY

US_CMS ECAL/Tracker AC-DC Converter 3000W Power Supply Terminal Block support

Jan. 14, 2005

term_blk_support.dwg

SIZE	FSCM NO.	DWG NO.	REV
		3892.136-MB-330528	B
SCALE 1:1			SHEET 1 of 1