REVISIONS				
ZONE	REV	DESCRIPTION	DATE	APPROVED

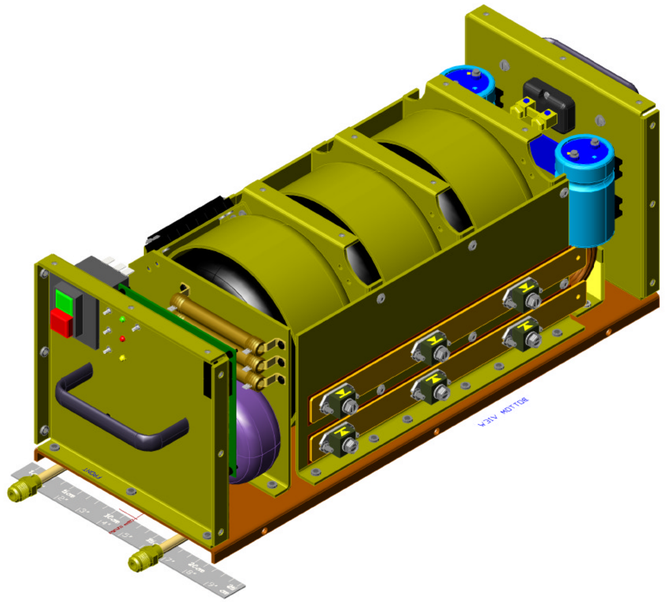

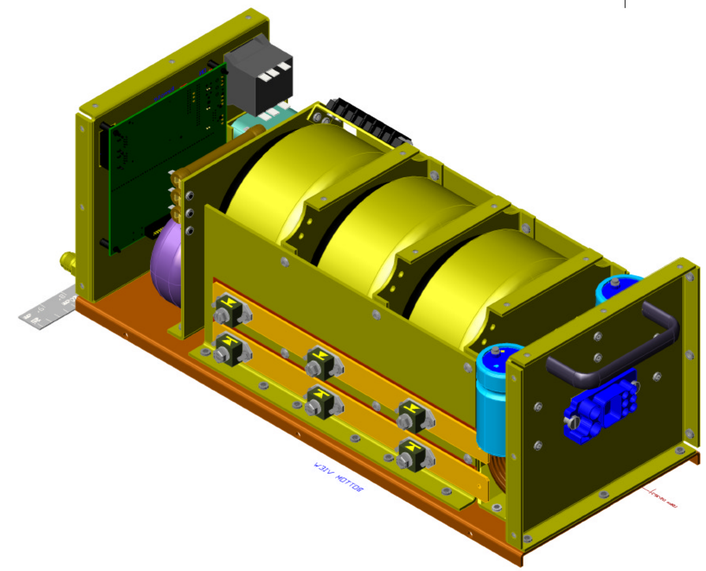

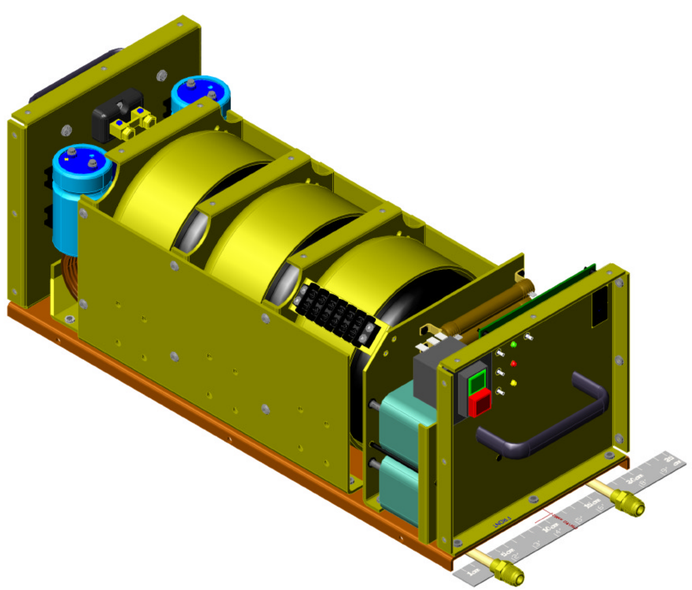

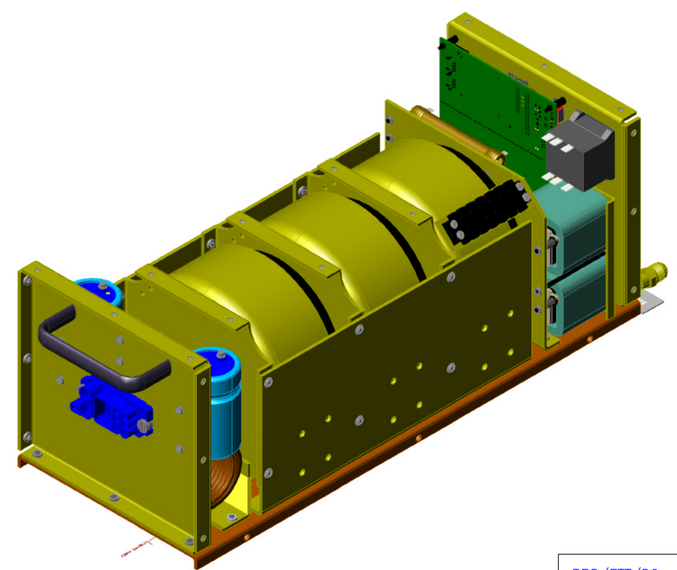

PPD/ETT/DO Electronics Group David L. Huffman	FERMI NATIONAL ACCELERATOR LABORATORY UNITED STATES DEPARTMENT OF ENERGY
	US-CMS ECAL/Tracker AC-DC Converter 3000W Power Supply Low Voltage PS Overall Assembly
Dec. 27, 2004	SIZE / FSCM NO. / DWG NO. 3892.136-MD-330529 / REV
lvps_assm.dwg	SCALE 1:1 / SHEET 1 of 1