REVISIONS				
ZONE	REV	DESCRIPTION	DATE	APPROVED

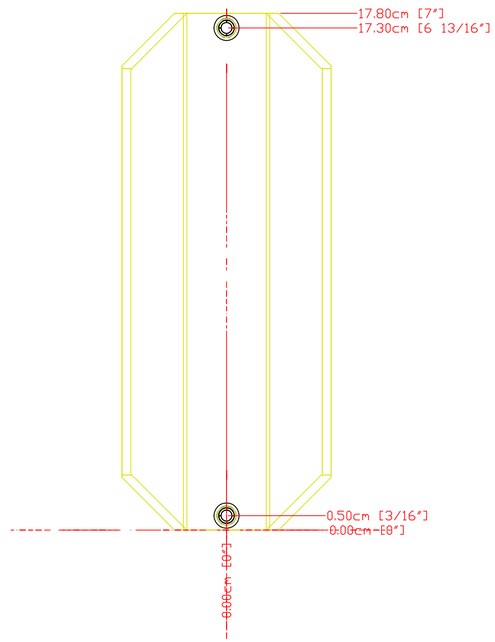

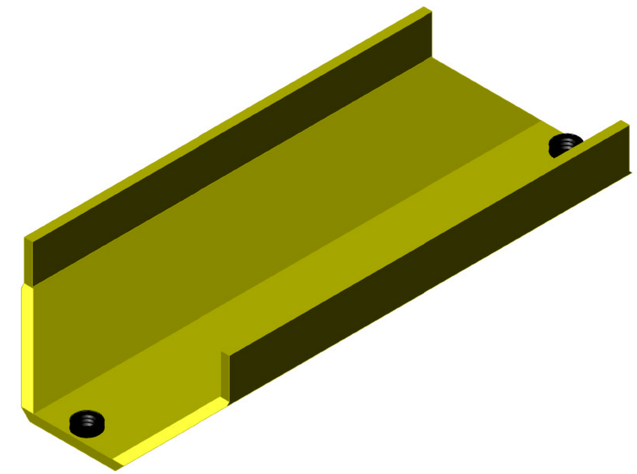

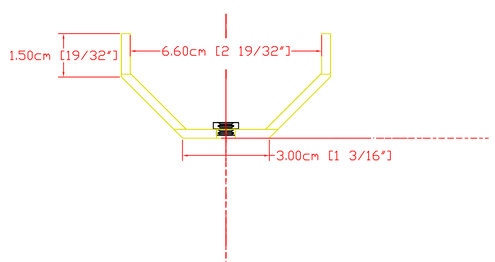

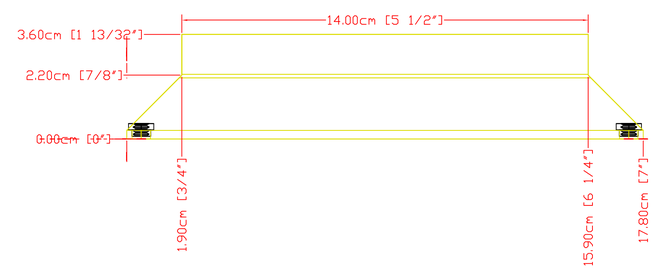

NOTE: Material is $\frac{1}{8}$" 6061-T4 Aluminum
Finish: Gold Iriditing
Drill 2 holes 0.64mm and install M5x0.8 self-clinching nut.

PPD/ETT/DO Electronics Group David L. Huffman	FERMI NATIONAL ACCELERATOR LABORATORY UNITED STATES DEPARTMENT OF ENERGY
	US_CMS ECAL/Tracker AC-DC Converter 3000W Power Supply Choke Bracket
Dec. 27, 2004	SIZE / FSCM NO. / DWG NO. 3892.136-MD-330530 / REV
chokeboat.dwg	SCALE 1:1 / SHEET 1 of 1