REVISIONS				
ZONE	REV	DESCRIPTION	DATE	APPROVED
	A	Changed holes for handles and ac input cutout	2004 0520	DLH

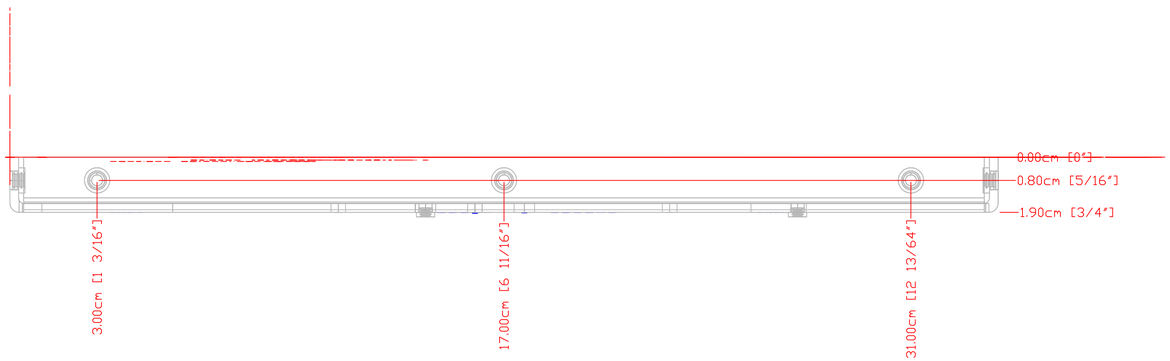

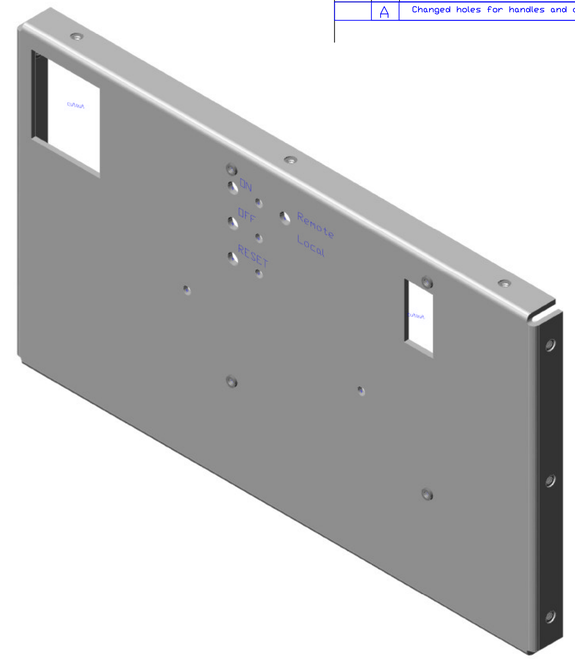

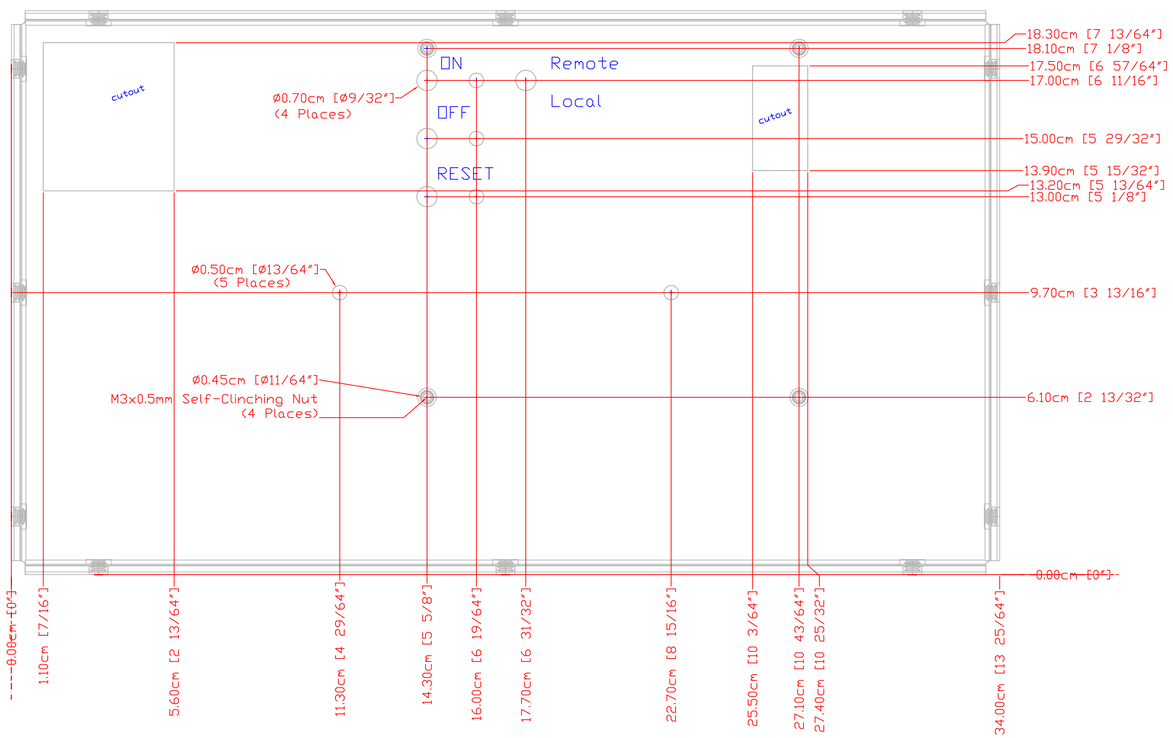

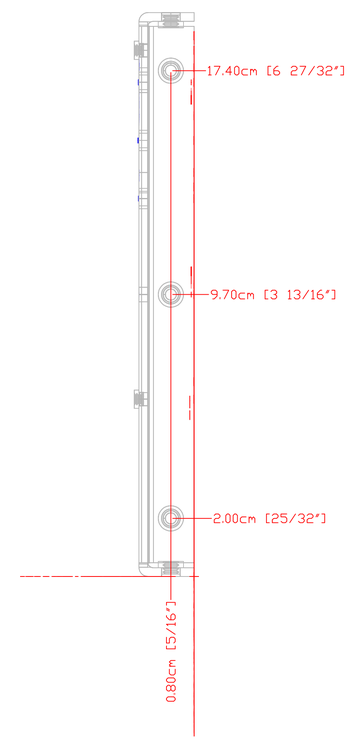

NOTE: SIDE HOLES HAVE SELF-CLINCHING M5x0.8mm NUTS (TYPICAL HOLE SIZE 6.4mm DIAMETER) 12 PLACES.
Material: Cold Rolled Steel 16Ga (63mils)
Finish: Electroplate Zinc & Chromate

PPD/ETT/DO Electronics Group David L. Huffman	FERMI NATIONAL ACCELERATOR LABORATORY UNITED STATES DEPARTMENT OF ENERGY
	US_CMS EMu AC-DC Converter 1500W Power Supply Chassis Front Panel
Feb. 07, 2005	SIZE / FSCM NO. / DWG NO. 3892.136-MD-330445 / REV A
chassis_front.dwg	SCALE 1:1 / SHEET 1 of 1