REVISIONS				
ZONE	REV	DESCRIPTION	DATE	APPROVED

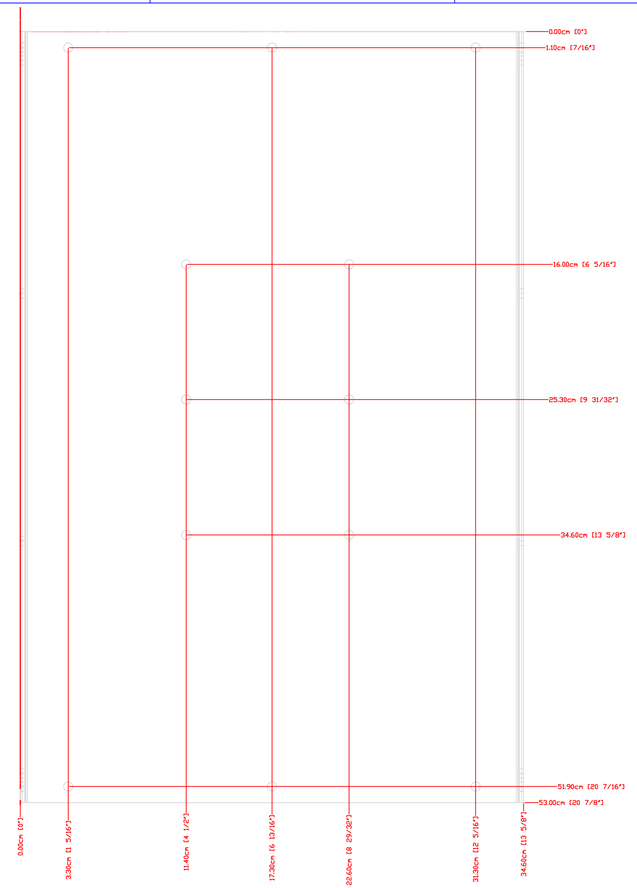

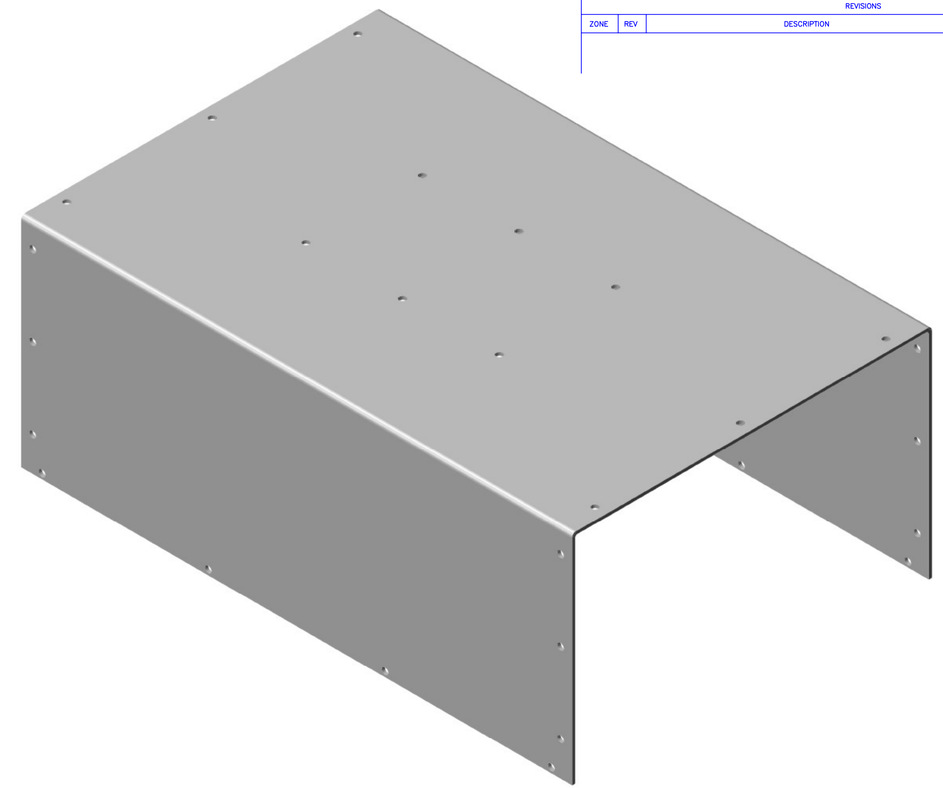

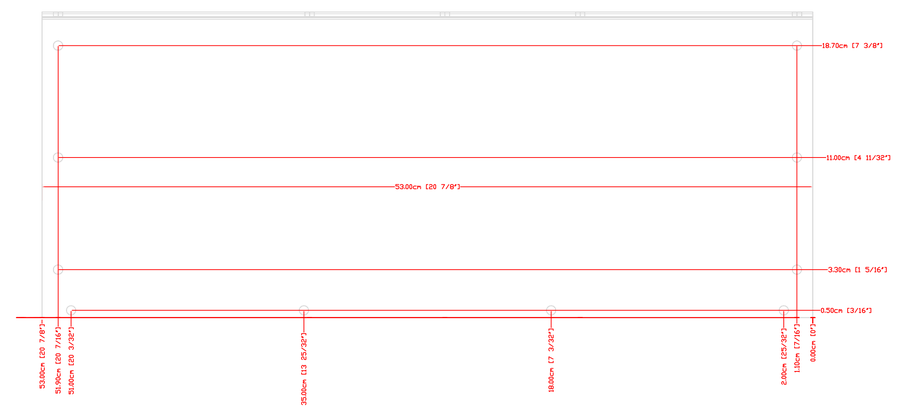

NOTE: Holes are 6.4mm clearance
Material: Cold Rolled Steel
Finish: Electroplate Zinc & Chromate

PPD/ETT/DO
Electronics Group
David L. Huffman

FERMI NATIONAL ACCELERATOR LABORATORY
UNITED STATES DEPARTMENT OF ENERGY

US_CMS EMu AC-DC Converter
1500W Power Supply
Chassis Top Cover

Feb. 07, 2005	SIZE	FSCM NO.	DWG NO. 3892.136-MD-330443	REV A
chassis_top.dwg	SCALE 1:1		SHEET 1 of 1