REVISIONS				
ZONE	REV	DESCRIPTION	DATE	APPROVED

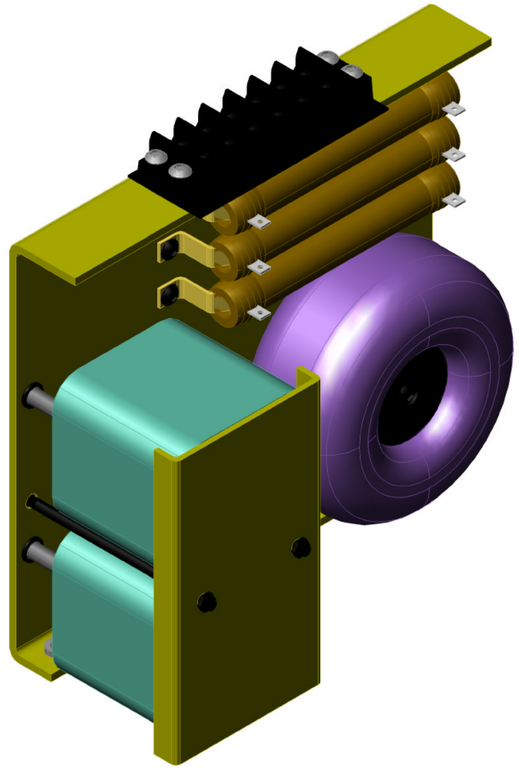

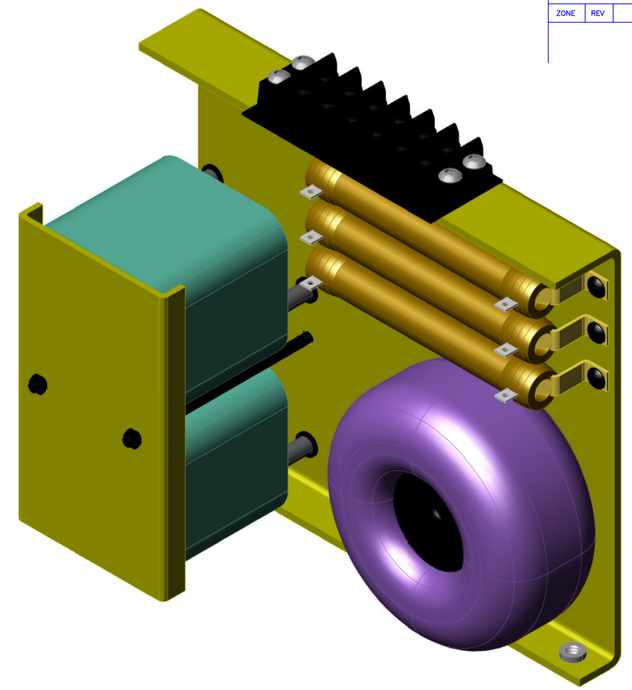

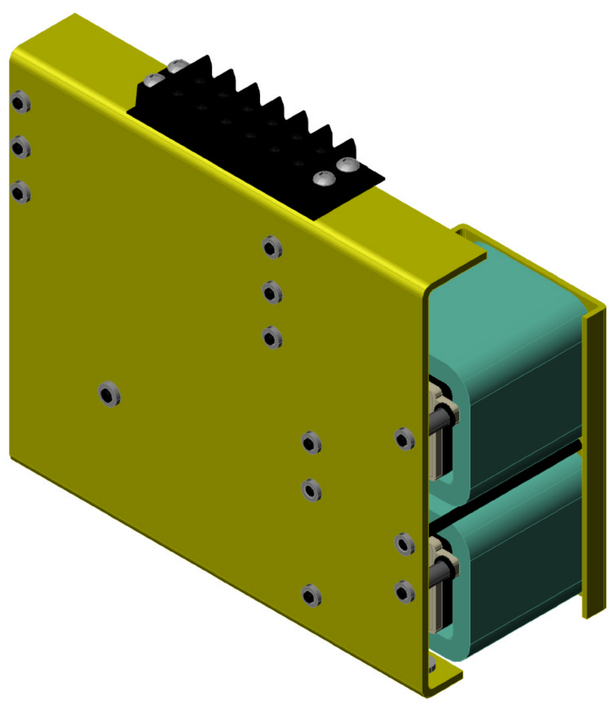

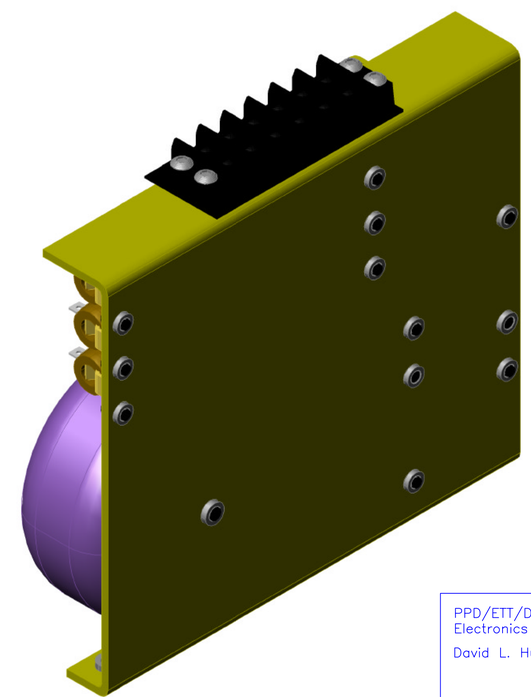

PPD/ETT/D0
Electronics Group

David L. Huffman

FERMI NATIONAL ACCELERATOR LABORATORY
UNITED STATES DEPARTMENT OF ENERGY

US_CMS ECAL/Tracker AC-DC
Converter 3000W Power Supply
Control Assembly

Dec. 09, 2004

control_assm.dwg

SIZE	FSCM NO.	DWG NO.	REV
		3892.136-MD-330517	A

SCALE 1:1

SHEET 1 of 1