REVISIONS				
ZONE	REV	DESCRIPTION	DATE	APPROVED

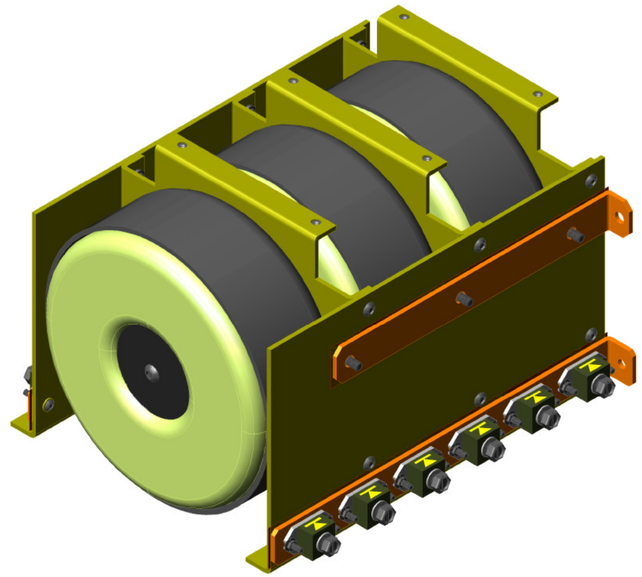

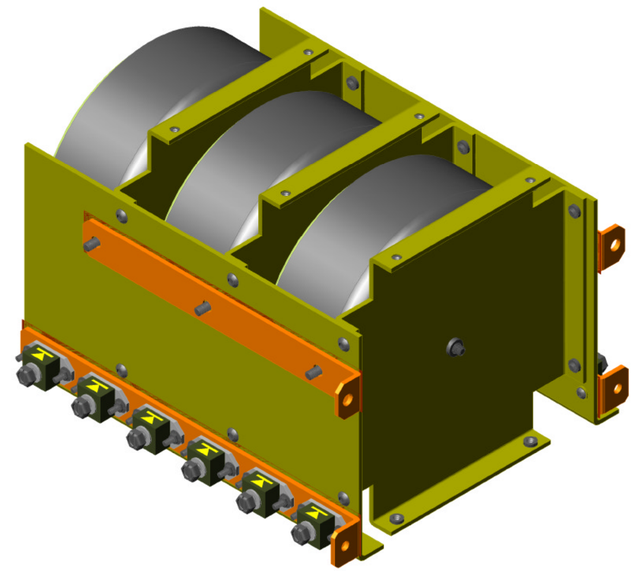

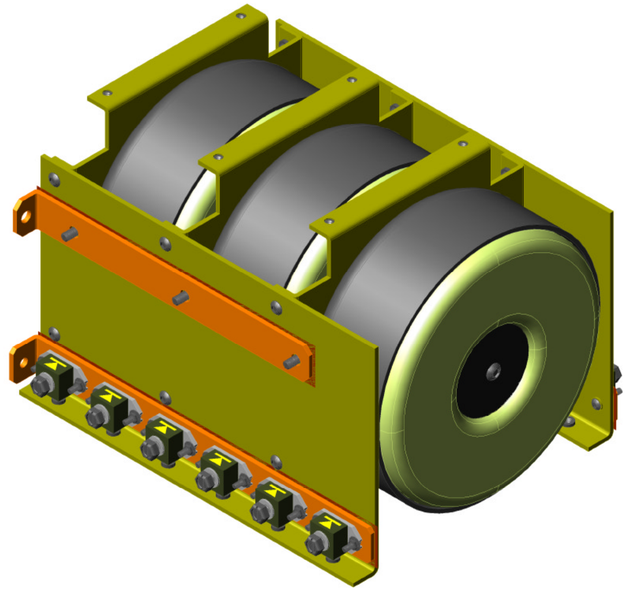

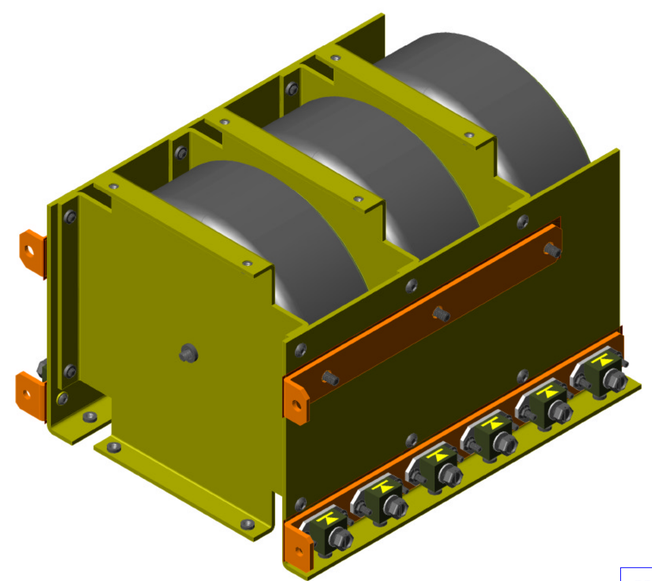

PPD/ETT/D0
Electronics Group

David L. Huffman

FERMI NATIONAL ACCELERATOR LABORATORY
UNITED STATES DEPARTMENT OF ENERGY

US_CMS EMu AC-DC Converter
1500W Power Supply
Core Assembly

Feb. 07, 2005

core_assm.dwg

SIZE	FSCM NO.	DWG NO.	REV
		3892.136-MD-330457	A

SCALE 1:1 SHEET 1 of 1