REVISIONS				
ZONE	REV	DESCRIPTION	DATE	APPROVED

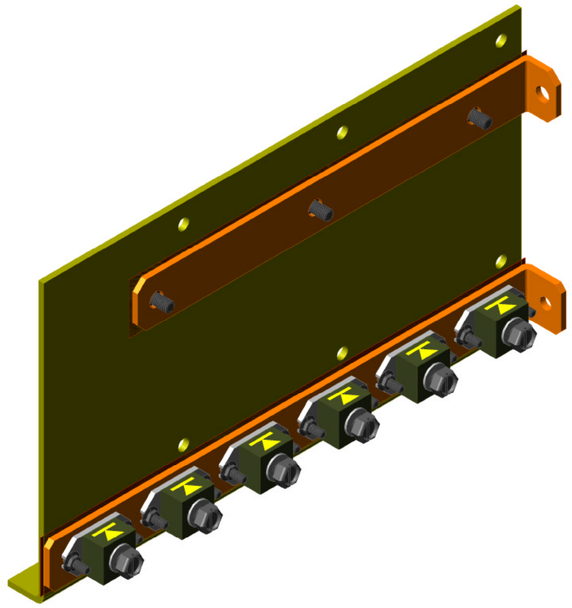

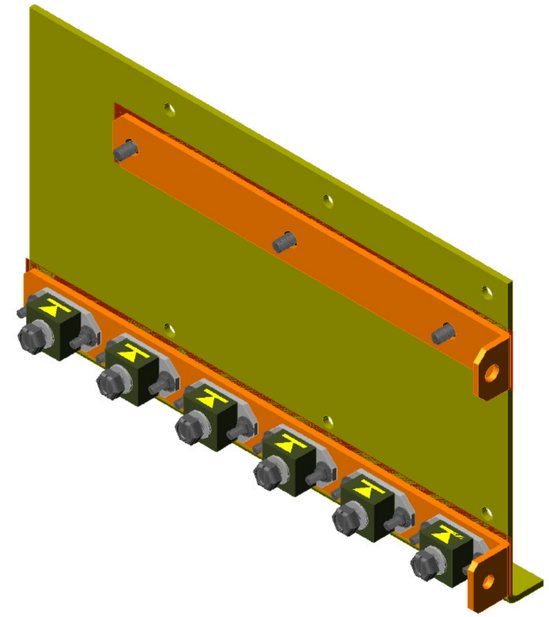

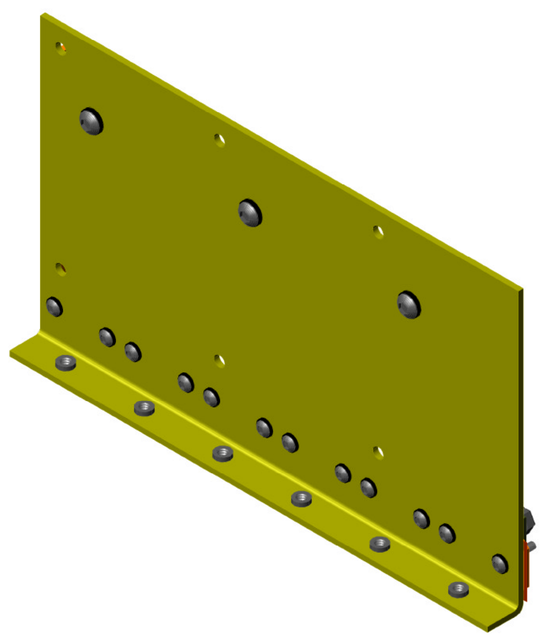

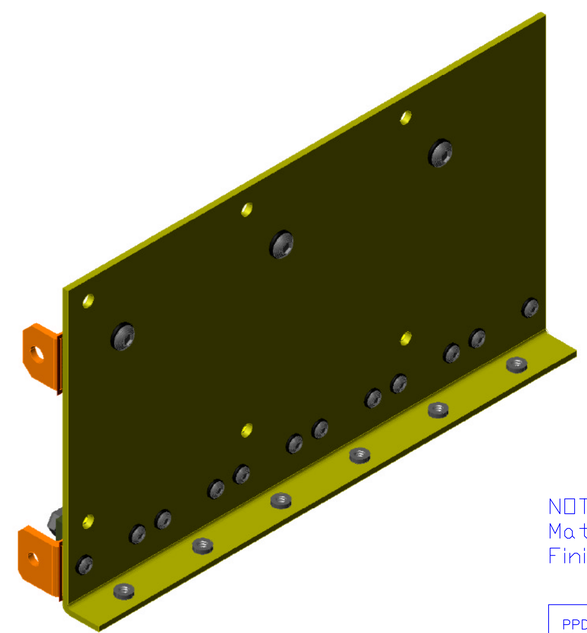

NOTE: Holes
Material:
Finish:

PPD/ETT/D0 Electronics Group David L. Huffman	FERMI NATIONAL ACCELERATOR LABORATORY UNITED STATES DEPARTMENT OF ENERGY
	US_CMS EMu AC-DC Converter 1500W Power Supply Diode Assembly Right
Feb. 07, 2005	SIZE / FSCM NO. / DWG NO. 3892.136-MD-330454 / REV A
diode_assm.dwg	SCALE 1:1 / SHEET 1 of 1