ANSI C63.4-2001
(Revision of
ANSI C63.4-1992)

American National Standard for Methods of Measurement of Radio-Noise Emissions from Low-Voltage Electrical and Electronic Equipment in the Range of 9 kHz to 40 GHz

Accredited Standards Committee on Electromagnetic Compatibility, C63

accredited by the

American National Standards Institute

Secretariat

Institute of Electrical and Electronics Engineers, Inc.

Approved 6 June 2001 by the

American National Standards Institute

Abstract: U.S. consensus standard methods, instrumentation, and facilities for measurement of radio-frequency (RF) signals and noise emitted from electrical and electronic devices in the frequency range 9 kHz to 40 GHz are specified. This standard does not include generic nor product-specific emission limits. Where possible, the specifications herein are harmonized with other national and international standards used for similar purposes.
Keywords: conducted emission testing, conducting ground plane, digital equipment, electric field measurement, line impedance stabilization network, low-voltage electrical equipment, low-voltage electronic equipment, magnetic field measurement, normalized site attenuation, radiated emission testing, radio-noise emissions, radio-noise power, site attenuation, unintentional radiators

The Institute of Electrical and Electronics Engineers, Inc.
3 Park Avenue, New York, NY 10016-5997, USA

Copyright © 2001 by the Institute of Electrical and Electronics Engineers, Inc.
All rights reserved. Published 22 June 2001. Printed in the United States of America.

Print: ISBN 0-7381-2736-1 SH94808
PDF: ISBN 0-7381-2737-X SS94808

No part of this publication may be reproduced in any form, in an electronic retrieval system or otherwise, without the prior written permission of the publisher.

American National Standard

An American National Standard implies a consensus of those substantially concerned with its scope and provisions. An American National Standard is intended as a guide to aid the manufacturer, the consumer, and the general public. The existence of an American National Standard does not in any respect preclude anyone, whether he has approved the standard or not, from manufacturing, marketing, purchasing, or using products, processes, or procedures not conforming to the standard. American National Standards are subject to periodic reviews and users are cautioned to obtain the latest editions.

CAUTION NOTICE: This American National Standard may be revised or withdrawn at any time. The procedures of the American National Standards Institute require that action be taken to reaffirm, revise, or withdraw this standard no later than five years from the date of publication. Purchasers of American National Standards may receive current information on all standards by calling or writing the American National Standards Institute.

Authorization to photocopy portions of any individual standard for internal or personal use is granted by the Institute of Electrical and Electronics Engineers, Inc., provided that the appropriate fee is paid to Copyright Clearance Center. To arrange for payment of licensing fee, please contact Copyright Clearance Center, Customer Service, 222 Rosewood Drive, Danvers, MA 01923 USA; (978) 750-8400. Permission to photocopy portions of any individual standard for educational classroom use can also be obtained through the Copyright Clearance Center.

Introduction

(This introduction is not a part of ANSI C63.4-2001, American National Standard for Methods of Measurement of Radio-Noise Emissions from Low-Voltage Electrical and Electronic Equipment in the Range of 9 kHz to 40 GHz.)

Almost from the beginning of radio broadcasting, the electric utility companies were faced with the problem of radio noise. In 1924, the National Electric Light Association appointed a committee to study the subject. The manufacturers of electric power equipment had encountered similar problems, and in 1930, a subcommittee of the NEMA Codes and Standards Committee was established. The following year, the EEI-NEMA-RMA Joint Coordination Committee on Radio Reception was organized.

The Joint Coordination Committee issued a number of reports, among which was Methods of Measuring Radio Noise, 1940. This report included specifications for a radio-noise and field-strength meter for the frequency band 0.15 MHz to 18 MHz. The report recommended procedures for measuring radio-noise voltage (conducted noise) from low- and high-voltage apparatus, making noise field-strength measurements near overhead powerlines, determining broadcast field strengths, and collecting data upon which to base tolerable limits for radio noise.

During World War II, the needs of the armed services for instruments and methods for radio-noise measurement, particularly at frequencies higher than the broadcast band, became pressing, and in 1944, work on developing suitable specifications was begun by a special subcommittee of ASA Sectional Committee C63, Radio-Electrical Coordination. This special subcommittee developed a wartime specification that became Army-Navy Specification JAN-I-225 issued in 1945 and later approved as C63.1-1946, American War Standard-Method of Measuring Radio Interference of Electrical Components and Completed Assemblies of Electrical Equipment for the Armed Forces from 150 kHz to 20 MHz.

In 1951, ASA Sectional Committee C63, through its Subcommittee No. 1 on Techniques and Developments, started work on improving and extending measurement methods, taking into account methods mentioned in the 1940 report and those in current military specifications. In the course of this work, Subcommittee No. 1 developed the standard C63.4-1963, Radio-Noise Voltage and Radio-Noise Field Strength, 0.015 to 25 MHz, Low-Voltage Electric Equipment and Non-Electric Equipment. Work continued within the subcommittee on developing methods of measurement above 25 MHz and the subsequent inclusion of these measurement methods in future revisions of C63.4-1963.

C63.4-1963 was reaffirmed in 1969, and work within the subcommittee was accelerated to produce a draft standard that would make use of the experience gained by several years use of the standard, extend its coverage to embrace a broader frequency range, and incorporate newer measurement techniques that had been developed within the United States and by the International Special Committee on Radio Interference (CISPR) as set forth in CISPR Publications 14 and 16. The revised standard was published in 1981.

Although many improvements had been made in ANSI C63.4 in the several revisions, the reproducibility of measurements of radiated interference from one test site to another had not been completely satisfactory. In 1982, a concerted effort was organized in Subcommittee No. 1 of the American National Standards Committee C63 to determine how the technique could be improved. Evidence showed that the variability was caused, in part, by inadequate

— Control of site reference groundplane conductivity, flatness, site enclosures, effects of surrounding objects, and certain other site construction features.

— Accounting for antenna factors, associated cabling, and balun and device under test characteristics.

— Consideration of mutual coupling effects between the device under test and the receiving antenna and their images in the reference groundplane.

Accordingly, C63.4 was further revised in 1988 and standards ANSI C63.5, ANSI C63.6, and ANSI C63.7 were prepared to provide additional information.

Copyright © 2001 IEEE. All rights reserved.

In late 1988 and in 1989, the importance of including additional details on test procedures to provide proper evaluation of complex systems, such as information technology equipment and systems, was recognized. Measurements on such systems can be sensitive to the exact arrangement of equipment units and interconnecting cables. The 1991 edition was the result of a major effort on the part of the members of the Committee and various other participating individuals.

Work on a further revision began during 1991 to provide for the testing of intentional as well as unintentional radiators. The 1992 document included these changes. In 1994, work began on harmonizing the document with emerging international standards, clarifying several issues with respect to ac powerline conducted emission measurements and turntable usage, and standardizing terminology. The use of transverse electromagnetic (TEM) devices for measuring emissions, extension from 10 kHz down to 9 kHz, and revisions to the clause on the Artificial Hand were also added. Minor changes have been made to the normalized site attenuation tables to correct rounding errors. That work culminated in the current issue.

The following members of the C63 Committee served as task group leaders on this revision:

Wallace E. Amos	Donald Heirman	Hugh Van Tuyl
Ralph J. Calcavecchio	H. Robert Hofmann	Art Wall
	Ralph M. Showers	

Participants

At the time that this standard was published, the Accredited Standards Committee on Electromagnetic Compatibility, C63, had the following membership:

Ralph M. Showers, *Chair*

Edwin L. Bronaugh, *Vice Chair*

Robert Pritchard, *IEEE Secretariat*

Organization Represented	*Name of Representative*
American Council of Independent Laboratories (ACIL)	Ross A. Hansen
	Michael F. Violette *(Alt.)*
Alliance for Telcom Industry Solutions (ATIS)	Chrys Chrysanthou
American Radio Relay League (ARRL)	Dennis Bodson
	Edward F. Hare *(Alt.)*
AT&T Wireless	Keith Peavler
Curtis-Straus LLC	Jon Curtis
	Jonathan Stewart *(Alt.)*
ESD Association	Douglas C. Smith
Federal Communications Commission (FCC)	Art Wall
	Thomas E. Phillips *(Alt.)*
Food and Drug Administration (FDA)	Jon P. Casamento
	Jeffrey L. Silberberg *(Alt.)*
Hewlett-Packard Company	Kenneth Hall
Institute of Electrical and Electronics Engineers, Inc.	Donald N. Heirman
IEEE-EMCS	Edwin L. Bronaugh
Information Technology Industry Council (ITI)	John Hirvela
	William H. Johnston *(Alt.)*
Lichtig EMC Consulting	John F. Lichtig
Lucent Technologies—Bells Labs	H. Robert Hofmann
	Steven M. Crosby *(Alt.)*
National Electrical Manufacturers Association (NEMA)	William Murphy
	Kenneth Gettman *(Alt.)*
National Institute of Standards and Technology (NIST)	Dennis Camell
Oklahoma University Center for the Study of Wireless EMC	Hank Grant
	Donald Heirman *(Alt.)*

Copyright © 2001 IEEE. All rights reserved.

Siemens ICM	H. Stephen Berger
Society of Automotive Engineers (SAE)—Land Vehicle	Poul H. Andersen
Society of Automotive Engineers (SAE)—Aerospace	Herbert Mertel
Southwest Research Institute	J. B. Scrivner
	James J. Polonis *(Alt.)*
TUV Product Service	Barry Wallen
	Erick Borgstrom *(Alt.)*
Underwriters Laboratories	Michael Windler
	Robert DeLisi *(Alt.)*
UNISYS Corporation	Wallace E. Amos
	Daniel Mis *(Alt.)*
U.S. Dept. of Energy—Oak Ridge National Laboratory	Paul D. Ewing
	Richard A. Hess *(Alt.)*
U.S. Dept. of the Navy and N.W.S.C.	Marcus Shellman
Violette Engineering Corporation	J. L. Norman Violette
	Michael F. Violette
Members-at-Large	Ralph J. Calcavecchio
	Daniel D. Hoolihan
	A. Heath Light
	William T. Rhoades
	Werner Schaefer
	Ralph M. Showers

Catherine K.N. Berger
IEEE Standards Project Editor

Copyright © 2001 IEEE. All rights reserved.

Contents

1. Overview 1

   1.1 Scope 1
   1.2 Applications 2

2. References 3

3. Definitions and acronyms 4

   3.1 Definitions 4
   3.2 Acronyms 7

4. Measurement instrumentation 7

   4.1 General 7
   4.2 Detector function/selection of bandwidth 13
   4.3 Receiver monitoring 13
   4.4 Calibration of measuring equipment 13

5. Test facilities 15

   5.1 General requirements 15
   5.2 AC powerline conducted emission test requirements 15
   5.3 Radiated emission tests (below 30 MHz) 17
   5.4 Radiated emission tests (30 MHz to 1 GHz) 17
   5.5 Radiated emission test site requirements above 1 GHz 30
   5.6 Testing at manufacturer's location or user's installation 30
   5.7 Artificial hand (CISPR publication 16, Part 1-1999, Clause 21) 30

6. General requirements for EUT equipment arrangements and operation 32

   6.1 Operating conditions 32
   6.2 Arrangement of EUT 41

7. AC powerline conducted emission measurements 44

   7.1 Measurement requirements 44
   7.2 Measurement procedures 46

8. Radiated emission measurements 47

   8.1 Measurement requirements 47
   8.2 Antenna selection, location, and measuring distance 48
   8.3 Radiated emission measurement procedures 49

9. Radio-noise power 51

   9.1 Absorbing clamp measurement procedures 51

10. Test reports 52

Copyright © 2001 IEEE. All rights reserved.

10.1 Test report content 52
10.2 Test report disposition 56

11. Measurement of information technology equipment (ITE) 56

11.1 Operating conditions 57
11.2 Tabletop systems 57
11.3 Floor-standing equipment arrangement 59
11.4 Combination tabletop and floor-standing equipment arrangement 59
11.5 AC powerline conducted emission measurements 59
11.6 Radiated emission measurements 60

12. Measurement of unintentional radiators other than ITE 60

12.1 Measurement of receivers 61
12.2 Measurement of TV interface devices 63

13. Measurement of intentional radiators 69

13.1 Requirements of intentional radiators 70
13.2 Requirements of field disturbance sensors (RF intrusion alarms) 76

14. Limit relaxation for transients 76

Annex A (informative) Site attenuation using discrete frequencies 77

Annex B (informative) Site attenuation using swept frequencies 80

Annex C (informative) Site attenuation deviations 81

Annex D (informative) Method of exploratory radiated emission maximization 82

Annex E (informative) Step-by-step guidance for testing personal computers and associated peripherals .. 83

Annex F (informative) Verification of LISN characteristics 87

Annex G (informative) Absorbing clamp 90

Annex H (informative) Step-by-step guidance for testing unintentional radiators other than ITE 91

Annex I (informative) Step-by-step guidance for testing intentional radiators 102

Annex J (informative) Applicable clause of C63.4 by equipment type 110

Annex K (informative) Construction and use of the artificial hand 113

Annex L (informative) U.S. standards that require emissions measurements below 9 kHz 114

Annex M (normative) Test procedure for emissions testing in TEM waveguides 115

Annex M1 (informative) Sample OATS to TEM waveguide validation spreadsheet 125

Annex N (informative) Bibliography 127

Annex O (informative) Keyword index 129

Copyright © 2001 IEEE. All rights reserved.

American National Standard for Methods of Measurement of Radio-Noise Emissions from Low-Voltage Electrical and Electronic Equipment in the Range of 9 kHz to 40 GHz

1. Overview

1.1 Scope

This standard specifies U.S. consensus standard methods, instrumentation, and facilities for measurement of radio-frequency (RF) signals and noise emitted from electrical and electronic devices in the frequency range 9 kHz to 40 GHz. It does not include generic nor product-specific emission limits. Where possible, the specifications herein are harmonized with other national and international standards used for similar purposes.

Measurement methods are included for radiated and line-conducted emissions that can be generated by a variety of devices, as described in 1.2. Definitions are provided for terms and phrases contained in the text, in which the words do not represent obvious or common usage. Measurement instrumentation, facilities, and test sites are specified and characterized, including Open Area Test Sites (OATS) and RF absorber-lined, metal chambers used for radiated emission measurement. Transverse electromagnetic wave devices used for radiated emission measurement are treated in normative Annex M. The requirements of Annex M, when such tests are performed, shall take precedence in this standard. In most cases, measurement instrumentation and calibration requirements are only generally characterized in deference to standards dedicated to these subjects, which should be used in conjunction with this standard. Requirements for operation of test samples during measurements are presented for devices in general, as well as for specific types of devices that are frequently measured. Specific requirements for emission test data recording and reporting are presented with reference to general requirements contained in documents dedicated to standard laboratory practices, which also should be used in conjunction with this standard. The main text is augmented by a series of annexes, which provide details for certain measurement methods and facilities, as well as step-by-step procedures for measurement of emissions from specific types of devices. Annex J provides an index of main text clauses by device type.

NOTE—Annex A through Annex L, Annex M1, Annex N, and Annex O are informative.

Copyright © 2001 IEEE. All rights reserved.

1.2 Applications

This standard is intended to standardize methods, instrumentation, and facilities used to characterize device emissions with respect to voluntary or regulatory compliance requirements designed to protect authorized communication services. The specified procedures are intended to be applied primarily in controlled laboratory environments, but they may be used for emission measurement of insitu devices where indicated.

This standard may be applied to emission measurement of a variety of electrical/electronic devices regardless of size and character. The devices may be single, stand-alone units, or multiple, interconnected units. Examples of devices to which these measurement procedures may be applied include small hand-held electronic devices such as portable digital "assistants" and garage door openers, as well as large devices such as electronically controlled gas station pumps and systems of computers used in banking and insurance centers.

These methods may be applied to measurement of certain devices that purposefully radiate energy, such as intentional emitters, but might not be applicable to licensed transmitters in the United States and other countries. Similarly, these methods may not be adequate for measurement of emissions from avionics, industrial, scientific, and medical (ISM) equipment.

All limit specifications, relevant to a given emitting device, should be applied in their entirety to the characterization of the device over the specified frequency range in all propagation modes. Piecemeal application is discouraged and runs the risk of incomplete characterization, which could fail to protect the authorized services in the manner intended. Emission limit requirements shall be obtained from other voluntary and regulatory sources, and certain other procedural documents shall be applied concurrently where specified herein. Still other procedural documents may be used as alternatives to this standard where equivalent results can be demonstrated. For regulatory applications invoking the methods in this standard, results obtained as prescribed herein shall take precedence over results obtained with alternative methods.

Not all clauses in this standard are applicable to all devices that can be measured with these methods. The nature of this standard is to specify general methods that may be applied to all devices within its scope and to supplement these methods with particular requirements for some types of devices. Device-particular requirements take precedence over general requirements. See Annex J for guidance in applying this standard to specific types of devices.

Use of the word *shall* in this standard implies that the specification is considered to be necessary to satisfy this standard. The word *should* implies that the specification is recommended but not essential. Tolerances on dimensions and distances are based on good engineering practice where not specified.

A complete voluntary or regulatory requirement should specify the following information in conjunction with the application of this standard:

a) Limits and frequency ranges for both ac powerline conducted and radiated emission measurements

b) Measurement antenna distances for radiated emission measurements

c) Identification of any uncommon requirements such as the following:

   1) Radiated magnetic field strength measurements below 30 MHz (see 8.2.1)

   2) Radiated electric field strength measurements below 30 MHz (see 8.2.2)

   3) Use of the absorbing clamp for radiated emission measurements (see Clause 9)

   4) Use of a 5 μH line impedance stabilization network (LISN)(see IEEE Std 213-1987)

   5) Use of current probes for ac powerline conducted measurements (see 4.1.4)

   6) Relaxation of the limits for clicks (transients) (see Clause 14)

 Copyright © 2001 IEEE. All rights reserved.

7) Use of the artificial hand for measurement of portable, hand-held devices (see 5.7)

d) Any requirements that differ from the requirements contained herein

e) Any requirement concerning statements of uncertainty of the measurement results (see ISO/IEC Guide 25-1990).

NOTE—Methods for calculating measurement instrumentation uncertainty are under development.

2. References

This standard shall be used in conjunction with the following publications. When following specifications are superseded by an approved revision, the revision shall apply.

ANSI C63.2-1996, American National Standard for Electromagnetic Noise and Field Strength Instrumentation, 10 Hz to 40 GHz—Specifications.[1]

ANSI C63.5-1988, American National Standard for Electromagnetic Compatibility of Antennas Used for Radiated Emissions Measurements in Electromagnetic Interference (EMI) Control—Calibration of Antennas.

ANSI C63.5-1998, American National Standard for Calibration of Antennas Used for Radiated Emissions Measurements in Electromagnetic Interference (EMI) Control.

ANSI C63.6-1996, American National Standard Guide for the Computation of Errors in Open-Area Test Site Measurements.

ANSI C63.7-1992, American National Standard for Construction of Open-Area Test Sites for Performing Radiated Emission Measurements.

ANSI C63.14-1998, American National Standard Dictionary for Technologies of Electromagnetic Compatibility (EMC), Electromagnetic Pulse (EMP), and Electrostatic Discharge (ESD) (Dictionary of EMC/EMP/ESD Terms and Definitions).

ANSI C63.22, Draft Guide for Automated EMI Measurements.[2]

ANSI/NCSL Z540-1-1994, American National Standard for Calibration—Calibration Laboratories and Measuring Test Equipment—General Requirements.[3]

CISPR Publication 14 (1993), Limits and Methods of Measurement of Radio Interference of Radiated Disturbance Characteristics of Electrical Motor-Operated and Thermal Appliances for Household and Similar Purposes, Electrical Tools and Similar Electrical Apparatus.[4]

CISPR Publication 16 (Part 1—1999), CISPR Specifications for Radio Interference Measuring Apparatus and Measurement Methods.

---

[1]C63 publications are available from the Institute of Electrical and Electronics Engineers, 445 Hoes Lane, P.O. Box 1331, Piscataway, NJ 08855-1331, USA, or from the Sales Department, American National Standards Institute, 11 West 42nd St., New York, NY 10036, USA. (http://standards.ieee.org/).

[2]This ANSI standards project was not approved by ANSI at the time this publication went to press. For information about obtaining a draft, contact ANSI.

[3]NCSL publication are available fro National Conference of Standards Laboratories, 1800 30th St., Suite 305B, CO 80301, USA.

[4]CISPR publications are available from the International Electrotechnical Commission, 3 rue de Varembé, Case Postale 131, CH-1211, Genève 20, Switzerland/Suisse. In the United States, CISPR publications are available from the Sales Department, American National Standards Institute.

Copyright © 2001 IEEE. All rights reserved.

CISPR Publication 22 (1997), Limits and Methods of Measurement of Radio Interference Characteristics of Information Technology Equipment. (See also CENELEC EN 55022-1998 [B8].)[5]

EIA 378 (Aug., 1970), Measurement of Spurious Radiation from FM and TV Broadcast Receivers in the Frequency Range of 100 to 1000 MHz—Using the EIA Laurel Broadband Antenna.[6]

FCC 47 CFR Part 15, Radio Frequency Devices (1997).[7]

IEEE Std 139-1988 (Reaff 1999), IEEE Recommended Practice for the Measurement of Radio Frequency Emission from Industrial, Scientific, and Medical (ISM) Equipment Installed on User's Premises.[8]

IEEE Std 149-1979 (Reaff 1990), IEEE Standard Test Procedures for Antennas.

IEEE Std 187-1990 (Reaff 1995) IEEE Standard on Radio Receivers: Open Field Method of Measurement of Spurious Radiation from FM and Television Broadcast Receivers.

IEEE Std 213-1987 (Reaff 1998), IEEE Standard Procedure for Measuring Conducted Emissions in the Range of 300 kHz to 25 MHz from Television and FM Broadcast Receivers to Power Lines.

IEEE Std 475-1983 (Reaff 1994), IEEE Standard Measurement Procedure for Field Disturbance Sensors (RF Intrusion Alarms).

ISO/IEC Guide 25-1990, General Requirements for the Competence of Calibration and Testing Laboratories. (ISO/IEC Guide 25 will be replaced by ISO/IEC Standard 17025.)[9]

ISO 10012-1:1992, Quality Assurance Requirements for Measuring Equipment, Part 1: Meteorological Confirmation System for Measuring Equipment.

3. Definitions and acronyms

3.1 Definitions

The definitions in ANSI C63.14-1998, unless noted below, apply throughout this standard. Otherwise, use IEEE Std 100-1996 [B18]. Definitions in particular product standards or in applicable regulations take precedence.

3.1.1 ambient level: The value of unwanted radiated and conducted emissions existing at a specific test location and time when the test sample is not activated.

[5]The numbers in brackets correspond to those of the bibliography in Annex N.

[6]EIA publications are available from Global Engineering, 1990 M Street NW, Washington, DC 20036, USA. (http://global.ihs.com/).

[7]For information on how to purchase FCC publications, contact the Superintendent of Documents, U.S. Government Printing Office, Washington, DC 20402, USA.

[8]IEEE publications are available from the Institute of Electrical and Electronics Engineers, 445 Hoes Lane, P.O. Box 1331, Piscataway, NJ 08855-1331, USA. (http://standards.ieee.org/).

[9]ISO publications are available from the ISO Central Secretariat, Case Postale 56, 1 rue de Varembé, CH-1211, Genève 20, Switzerland/Suisse (http://www.iso.ch/). ISO publications are also available in the United States from the Sales Department, American National Standards Institute, 11 West 42nd Street, 13th Floor, New York, NY 10036, USA (http://www.ansi.org/).

 Copyright © 2001 IEEE. All rights reserved.

3.1.2 antenna factor: A factor that when multiplied with the linear voltage reading of the measuring instrument yields the electric field strength in volts/meter or the magnetic field strength in amperes per meter.

NOTES

1—The factor includes the effects of antenna effective length and mismatch, and it may include transmission line losses.

2—The factor for electric field strength is not necessarily the same as the factor for the magnetic field strength.

3—The antenna factor, as determined in ANSI C63.5-1998, is very nearly equal to the free-space antenna factor.

3.1.3 click: A disturbance of a duration less than a specified value when measured under specified conditions.

NOTE—For the specified values and conditions, guidance may be found in CISPR Publications 14 (1993) and 16 (Part 1—1999).

3.1.4 digital device: An unintentional radiator (device or system) that uses digital techniques and generates and uses timing signals or pulses at a rate in excess of 9000 pulses (cycles) per second; inclusive of telephone equipment that uses digital techniques or any device or system that generates and uses RF energy for the purpose of performing data processing functions, such as electronic computations, operations, transformations, recording, filing, sorting, storage, retrieval, or transfer. (FCC 47CFR Part 15).

NOTE—Computer terminals and peripherals that are intended to be connected to a computer are digital devices.

3.1.5 (electromagnetic) disturbance: Any electromagnetic phenomenon that may degrade the performance of a device, piece of equipment, or system, or adversely affect living or inert matter.

NOTE—An electromagnetic disturbance may be a noise, an unwanted signal, or a change in the propagation medium.

3.1.6 (electromagnetic) emission: The phenomenon by which electromagnetic energy emanates from a source.

3.1.7 equipment arrangement: An equipment configuration spacially arranged with cables at the test site to form an equipment under test (EUT) (also known as “test setup”).

3.1.8 equipment configuration: A combination of equipment units constituting the equipment under test (EUT).

3.1.9 equipment under test (EUT): A device or system being evaluated for compliance that is representative of a product to be marketed.

3.1.10 field disturbance sensor: A device that establishes a radio frequency (RF) field in its vicinity and detects changes in that field from the movement of persons or objects within its range. (FCC 47 CFR Part 15).

3.1.11 floor-standing equipment: Equipment designed to be used directly in contact with the floor, or supported above the floor on a surface designed to support both the equipment and the operator (e.g., a raised computer floor).

3.1.12 host: A device to which other devices (peripherals) are connected and that generally controls those devices.

3.1.13 incidental radiator: A device that produces RF energy during the course of its operation, although the device is not intentionally designed to generate or emit RF energy. Examples of incidental radiators are dc motors, mechanical light switches, and so on.

Copyright © 2001 IEEE. All rights reserved.

3.1.14 information technology equipment (ITE): Any equipment

a) That has a primary function of either (or a combination of) entry, storage, display, retrieval, transmission, processing, switching, or control, of data or of telecommunication messages and that may be equipped with one or more terminal ports typically operated for information transfer;

b) With a rated supply voltage not exceeding 600 V.

It includes, for example, data processing equipment, office machines, electronic business equipment, predominantly digital audio and video equipment, and telecommunications equipment.

3.1.15 intentional radiator: A device that intentionally generates and emits RF energy by radiation or induction. (FCC 47 CFR Part 15).

3.1.16 line impedance stabilization network (LISN): A network inserted in the power supply lead of apparatus to be tested that provides, in a given frequency range, a specified load impedance for each current-carrying conductor for the measurement of disturbance voltages and that may isolate the apparatus from the power supply in that frequency range, and couples the EUT emissions to the measuring instrument.

NOTE—An LISN unit may contain one or more individual LISN circuits.

3.1.17 low-voltage electrical and electronic equipment: Electrical and electronic equipment with operating input voltages of up to 600 VDC or 600 V rms ac.

3.1.18 normalized site attenuation (NSA): Site attenuation divided by the antenna factors of the radiating and receiving antennas (all in linear units).

3.1.19 peripheral device: A digital accessory that feeds data into or receives data from another device (host) that, in turn, controls its operation.

3.1.20 personal computer: A system containing a host and a limited number of peripherals designed to be used in the home or in small offices, which enables individuals to perform a variety of computing or word processing functions or both, and which typically is of a size permitting it and its peripherals to be located on a table surface (see also ITE).

NOTE—Other definitions given in product standards or applicable regulations may take precedence.

3.1.21 reference groundplane: A conducting flat surface or plate that is used as a common reference point for circuit returns and electric or signal potentials and that reflects electromagnetic waves.

3.1.22 restricted bands: Bands of frequencies in which intentional radiators are not permitted to operate. (FCC 47 CFR Part 15).

3.1.23 site attenuation: The ratio of the power input of a matched, balanced, lossless, tuned dipole radiator to that at the output of a similarly matched, balanced, lossless, tuned dipole receiving antenna for specified polarization, separation, and heights above a flat electromagnetically reflecting surface. It is a measure of the transmission path loss between two antennas.

NOTE—The above is the classic definition of site attenuation. In this standard, it is extended to cover broadband antennas as well as tuned dipole antennas.

3.1.24 system: A configuration of interconnected devices, including accessories and peripherals, and their cables which is designed to perform a particular function or functions.

 Copyright © 2001 IEEE. All rights reserved.

3.1.25 tabletop device: A device designed to be placed and normally operated on the raised surface of a table, e.g., most personal computers.

3.1.26 TV interface device: An unintentional radiator that produces or translates in frequency a radio carrier modulated by a video signal derived from an external or internal signal source, and that feeds the modulated RF energy by conduction to the antenna terminals or other non baseband input connections of a television broadcast receiver.

3.1.27 unintentional radiator: A device that generates RF energy for use within the device, or that sends RF signals by conduction to associated equipment via connecting wiring, but which is not intended to emit RF energy by radiation or induction. (FCC 47 CFR Part 15).

3.2 Acronyms

CISPR	International Special Committee on Radio Interference
CSTD	cable system terminal device
CW	continuous wave
EIA	Electronic Industries Alliance
EUT	equipment under test
FCC	Federal Communications Commission
ISM	industrial, scientific, and medical
ISN	impedance stabilization network (CISPR Publication 16)
ITE	information technology equipment
LISN	line impedance stabilization network
NIST	National Institute of Standards and Technology
NSA	normalized site attenuation
NTSC	National Television Systems Committee
OATS	open area test site
RC	resistor-capacitor
RF	radio frequency
TEM	transverse electromagnetic
VCR	videocassette recorder
VDU	video display unit
VITS	vertical interval test signal
VSWR	voltage standing-wave ratio

4. Measurement instrumentation

4.1 General

Use of proper measurement instrumentation is critical to obtaining accurate, reproducible results. Various measuring accessories that may be needed depend on the particular measurements to be performed, as indicated in the subclauses that follow.

Copyright © 2001 IEEE. All rights reserved.

4.1.1 Receiver standards

Measurements of radiated and ac powerline conducted radio noise shall be made with an instrument conforming to ANSI C63.2-1996 or CISPR Publication 16, or with a spectrum analyzer. Where there is disagreement on the results of a test, measurement data obtained with equipment conforming to ANSI C63.2-1996 shall take precedence. Measurements may be automated in certain instances. See ISO/IEC Guide 25-1990 for recommendations.

4.1.1.1 Reference receiver

The reference receiver for measurements of radiated and ac powerline conducted radio noise is an instrument conforming to ANSI C63.2-1996 or CISPR Publication 16. Other instruments may be used for certain restricted and specialized measurements when data so measured are correlated to a device conforming to ANSI C63.2-1996. Automatic scan receivers may be used, but the maximum scan speed shall be limited by the response time of the measuring system and the repetition rate of the radio noise to be measured to ensure that the level of each emission is measured correctly, i.e., in accordance with a measurement with a nonscanning receiver. Bandwidth and scan rates shall be chosen that are appropriate for the frequencies being scanned.

NOTES

1—If the output of the quasi-peak or average detector is indicated in decibels (dB) or other logarithmic units, the logarithms shall be taken after the signal is detected and the detector function is fully realized. Otherwise, instruments that use logarithmic detectors, predetection logarithmic circuits, or both shall include corrective circuits so that the output indication is the logarithm of the true average or quasi-peak value of the signal or noise. Bandwidths are given in 4.2.

2—The user should be aware that CISPR Publication 16 and ANSI C63.2-1996 specify receiver bandwidth differently for measurements above 1 GHz, which may result in different measured values.

4.1.1.2 Spectrum analyzer

When a spectrum analyzer is used, it shall be provided with appropriate accessories to provide sufficient sensitivity and overload protection to ensure accurate, repeatable measurements of all emissions over the specified frequency range. The autoscan limitations of 4.1.1.1 also apply to spectrum analyzers.

NOTES

1—The accessories needed depends on the specific measurement task and may include preamplifiers for improving sensitivity, filters and attenuators for overload protection, additional intermediate frequency (IF) filters with specific bandwidths and shapes, and additional quasi-peak detection circuits.

2—Overload includes harmonic distortion, intermodulation distortion, and gain compression of spectrum analyzer input signals.

3—If a post detector filter is used, its bandwidth shall be wide enough as to not affect peak, quasi-peak, and average detector readings.

4.1.2 LISN

An LISN having an impedance characteristic within the limits shown in Figure 1 is required for ac conducted emission measurements. When the “measuring instrument” ports are terminated in 50 Ω, the characteristic impedance in Figure 1 shall be present at the EUT ports of the LISN. Figure 2 and Figure 3 show two circuits that when carefully constructed can provide the impedance characteristics of Figure 1 (for use with connecting cable, see also 5.2.3.1).

Where specific equipment requirements specify another LISN, for example, IEEE Std 213-1987, that LISN shall be used.

 Copyright © 2001 IEEE. All rights reserved.

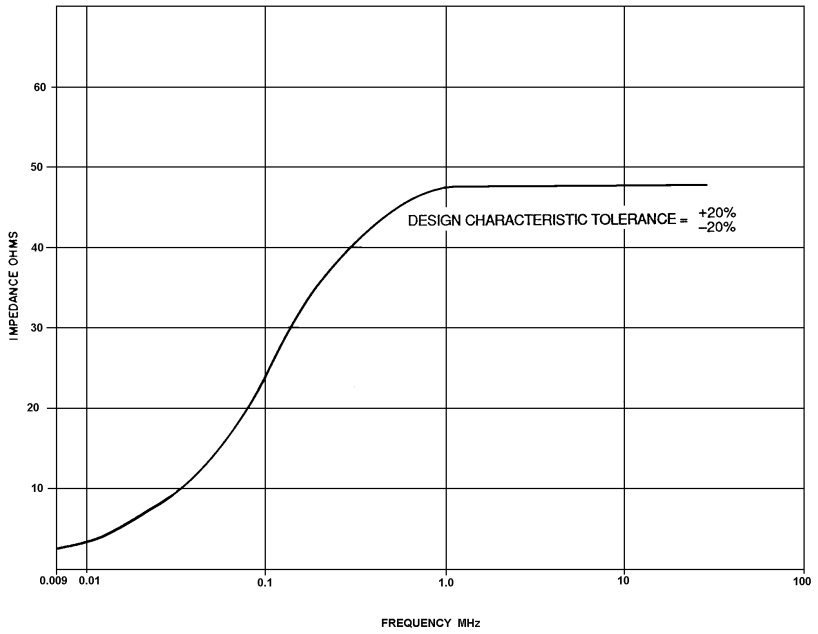

Figure 1—Impedance characteristic of LISN port 9 kHz to 30 MHz

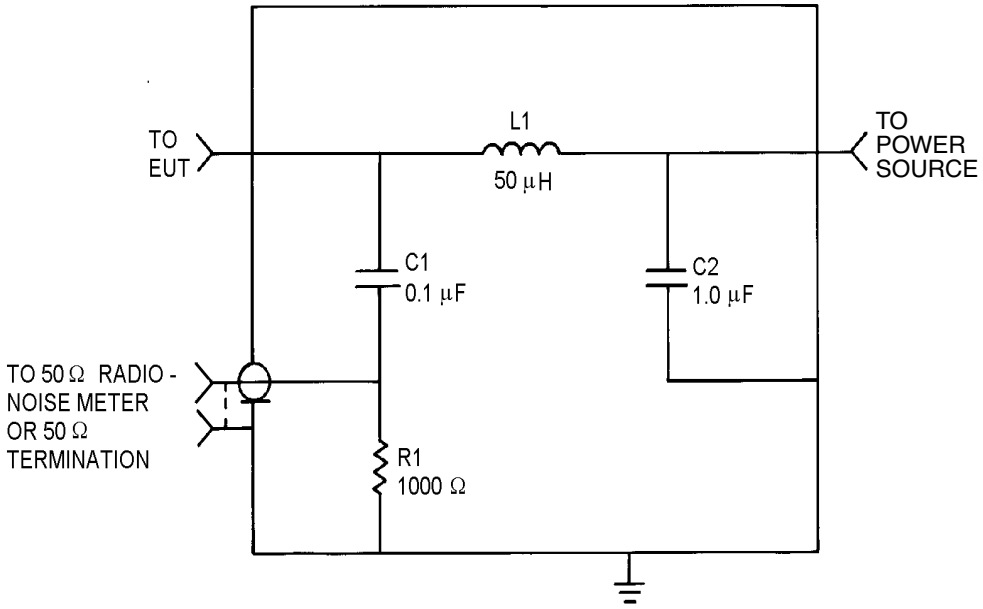

*IN SOME LISNs, A SERIES RESISTANCE IS INCLUDED IN SERIES WITH CAPACITOR C2, E.G., CISPR PUBLICATION 16 - 1999

Figure 2—Circuit diagram of LISN to provide impedance of Figure 1 for the 0.15 MHz to 30 MHZ frequency range

Copyright © 2001 IEEE. All rights reserved.

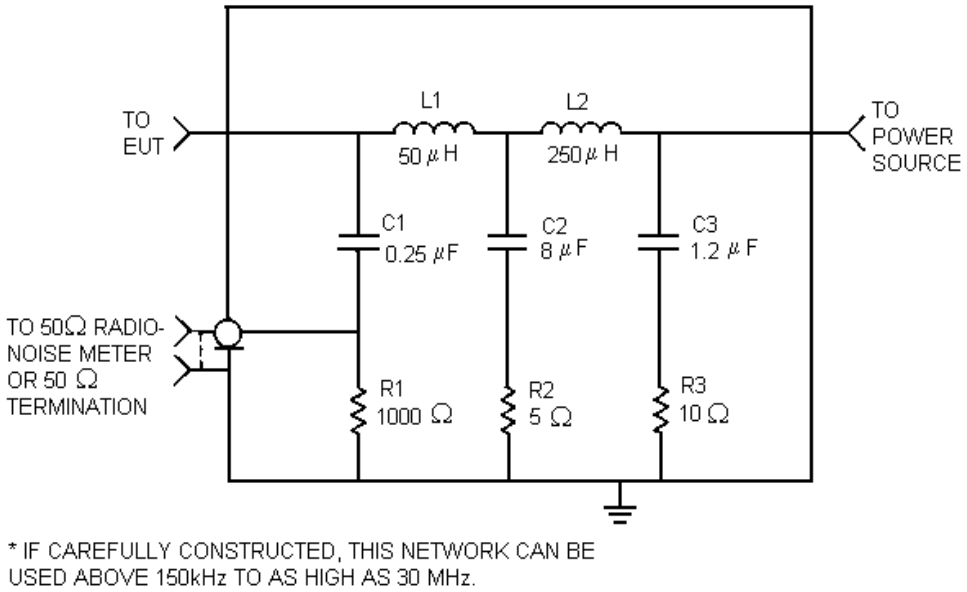

Figure 3—Circuit diagram of LISN to provide impedance of Figure 1 for the 9 kHz to 150 kHz (30 MHz) frequency range

4.1.3 Voltage probes

A voltage probe may be used for radio-noise voltage measurements when measurements are made at a user's installation (see 5.6) or when the ac current level exceeds the current-carrying capability of commercially available LISNs. For such measurements, the method shown in Figure 4 may be used. Special precautions shall be taken to establish a reference ground for the measurements. An LISN shall not be used in conjunction with a voltage probe for measurements at a user installation. The measurements are dependent on the impedance presented by the power supply and may vary with time and location because of variations in the power supply. (It may be necessary to perform repeated measurements over a suitable period of time to determine the variation in measured values. The time period shall be sufficient to cover all significant variations caused by operating conditions at the installation.) Such measurement results shall be regarded as unique to that EUT and installation environment. The measurements shall be made between each current-carrying conductor in the power supply and the ground conductor with a blocking capacitor (C) and a resistor (R), shown in Figure 4, such that the total resistance between line and ground is 1500 Ω. Since the voltage probe attenuates the radio-noise voltage, appropriate calibration factors shall be added to the measured values. Measurements made with LISNs shall take precedence over measurements made with voltage probes.

 Copyright © 2001 IEEE. All rights reserved.

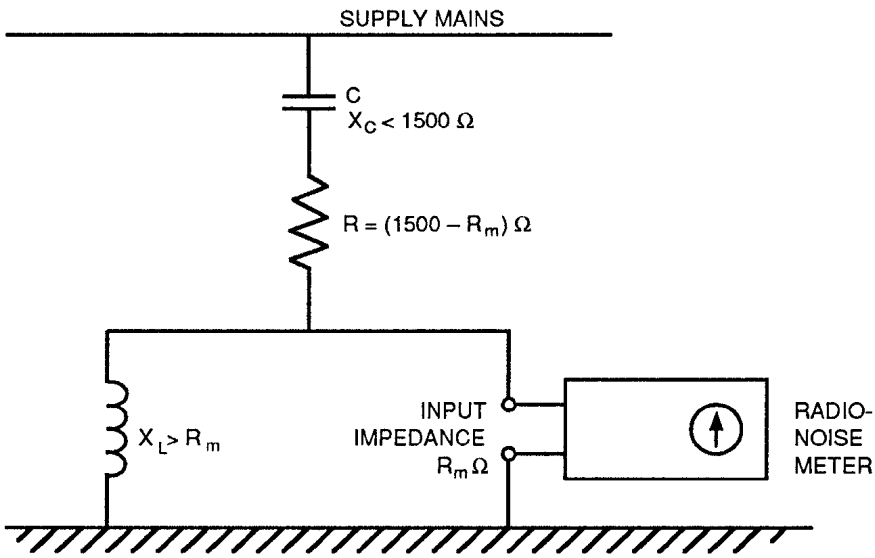

Figure 4—Voltage probe for measurements at user's installation

4.1.4 Current probe

A current probe that fits around each current-carrying conductor under measurement may be used, when permitted, to measure radio-noise currents (in lieu of radio-noise voltages) generated by the EUT. The probe shall be immune to external fields, calibrated, and used with the proper terminating impedance. An LISN in accordance with 4.1.2 shall be inserted between the EUT conductors and the power receptacle. The probe is placed between the EUT and the LISN as near to the LISN as possible. An appropriate adapter may be fitted between the EUT and the LISN to allow the current probe to be clamped on individual current-carrying conductors. If an appropriate LISN satisfying the current requirements of the EUT is not commercially available, the LISN may be eliminated and the current probe placed between the EUT and the power receptacle.

4.1.5 Antennas

The use of specific antennas depends on the frequency range and field (electric or magnetic) being measured in performing radiated emissions measurements, as indicated in 4.1.5.1, 4.1.5.2, 4.1.5.3, and 4.1.5.4. For the present, both ANSI C63.5-1988 and ANSI C63.5-1998 are referenced for use in calibrating antennas for both radiated electronic field emission measurements and site attenuation measurements. Both versions are retained so that test sites qualified using either standard are acceptable. Antenna calibrations for making radiated emission measurements can use either version of the standard in that the differences are not considered significant for this purpose. A revision to ANSI C63.5 is in preparation that will replace both of the earlier documents and will have a single approach for antenna calibration for radiated electric field measurements using the Standard Site Method.

Copyright © 2001 IEEE. All rights reserved.

4.1.5.1 Magnetic field measurements (9 kHz to 30 MHz)

Calibrated loop antennas as specified in ANSI C63.2-1996 shall be used to measure magnetic fields in the frequency range of 9 kHz to 30 MHz.

4.1.5.2 Electric field measurements (9 kHz to 30 MHz)

Calibrated monopole (rod) antennas as specified in ANSI C63.2-1996, ANSI C63.5-1988, and ANSI C63.5-1998 shall be used to measure electric fields in the frequency range of 9 kHz to 30 MHz. Generally, a 1.04 m (approximately 41 in) vertical monopole antenna is used with or without a counterpoise, as specified by the manufacturer.

NOTE—Some regulatory and purchasing agencies do not allow the use of a rod antenna for measurement of radiated emissions.

4.1.5.3 Electric field measurements (30 MHz to 1000 MHz)

Calibrated, linearly polarized antennas as specified in ANSI C63.2-1996 shall be used to measure electric fields in the frequency range of 30 MHz to 1000 MHz. Tunable dipoles should be used. Alternatively, a linearly polarized broadband antenna or a dipole tuned only above 80 MHz, and set to the 80 MHz tuned length when used between 30 and 80 MHz, may be used in lieu of a tuned dipole, provided that the measurement can be correlated with that made with a tuned dipole with an acceptable degree of accuracy. In case of dispute, data taken with a reference antenna or a tuned dipole calibrated in accordance with ANSI C63.5-1988 and ANSI C63.5-1998 shall take precedence.

4.1.5.4 Electric field measurements (1 to 40 GHz)

Calibrated, linearly polarized antennas as specified in ANSI C63.2-1996 shall be used. These include double-ridged guide horns, rectangular waveguide horns, pyramidal horns, optimum gain horns, and standard gain horns. The “beam,” or main lobe of the pattern, of any antenna used, shall be large enough to encompass the EUT, or system arrangement, when located at the measuring distance. Otherwise, provisions shall be made for “scanning” the EUT or system arrangement to locate the direction or source of its radiated emissions. The aperture dimensions of these horn antennas shall be small enough so that the measurement distance in meters is equal to or greater than the Rayleigh distance, i.e., $R_m = D^2 / (2\lambda)$, where D is the largest dimension of the antenna aperture in meters, and λ is the free-space wavelength in meters at the frequency of measurement. In case of dispute, measurements made with the standard gain horn antenna shall take precedence.

NOTE—Any calibrated, linearly polarized antenna, e.g., a log-periodic dipole array, may be used to make these measurements. The gain of many antennas, other than horn antennas, in this frequency range may be inadequate if the antennas are used with spectrum analyzers or older radio-noise meters. The tester shall ensure that the overall measurement sensitivity is at least 6 dB below the applicable limit at the measurement distance in use, and that any means used to improve sensitivity, e.g., a preamplifier, does not cause distortion, spurious signals, or other overload problems. Because a log-periodic dipole array has a much wider beam width than a horn antenna, reflections from the reference groundplane may cause significant error in measurements that are made with a log-periodic dipole array. The tester shall ensure that these reflections do not adversely affect the measured value.

4.1.6 Absorbing clamp

Measurements of radio-noise power, if required, are made with an absorbing clamp (see Clause 9).

NOTE—Some regulatory and purchasing agencies do not allow the use of the absorbing clamp for measurement of radio-noise power.

 Copyright © 2001 IEEE. All rights reserved.

4.2 Detector function/selection of bandwidth

Unless otherwise specified, radio-noise meters or spectrum analyzers shall have as the reference detector function the quasi-peak detector specified in ANSI C63.2-1996 for frequencies up to and including 1 GHz. For measurements above 1 GHz, if peak or average detectors are specified, use the ANSI C63.2-1996 requirements. Detector functions other than those specified by the procuring or regulatory agency may be used for making such measurements, provided data so taken are correlatable to data taken with the appropriate detector and the associated instrument bandwidth, or peak detector measured data may be substituted for the appropriate detector data to show compliance if the peak level obtained does not exceed the limit. The bandwidth used shall be equal to or greater than that specified in ANSI C63.2-1996. The bandwidth used shall be equal to or greater than 100 Hz from 9 kHz to 150 kHz, 9 kHz from 150 kHz to 30 MHz, 100 kHz from 30 MHz to 1000 MHz, and 1 MHz from 1 GHz to 40 GHz. More than one instrument may be needed to perform all of these functions.

The measuring instrument shall satisfy the following conditions:

— The measuring instrumentation with the quasi-peak, peak, or average detector shall have a linear response.

— When measuring an emission with a low duty cycle, the dynamic range of the measuring instrument shall not be exceeded.

NOTE—Use of bandwidths greater than those specified may produce higher readings for certain types of emission.

4.3 Receiver monitoring

All radio-noise measurements should be monitored using a head-set, a loudspeaker, a spectrum display, or any combination thereof as an aid to detecting ambient signals and selecting the emissions that have the highest amplitude relative to the limit. Precautions shall be taken to ascertain that the use of a headset or speaker does not affect the measuring instrument indication during measurements.

4.4 Calibration of measuring equipment

All instruments that can have a significant effect on the accuracy or validity of measurements made as specified in this standard shall be calibrated in accordance with the manufacturers recommendations and the instrument requirements of ANSI C63.2-1996. The instruments shall be maintained as a system to ensure measurement accuracy traceable to SI units of measurement via national (NIST) or international standards, as specified in ANSI/NCSL Z540-1-1994 or ISO 10012-1:1992.

4.4.1 Confirmation interval

Calibration of all instruments shall be confirmed in the first year. Subsequent confirmation intervals may be longer (up to two years) or shorter based on review of calibration data relative to the instrument manufacturers recommendations, the extent and severity of use of the instrument, and the required measurement accuracy. The objective is to optimize requirements to minimize uncertainty versus the need to minimize costs. See ISO 10012-1:1992. All instruments should be checked as frequently as necessary between calibration confirmation intervals to provide evidence that instrument operability is continuously maintained.

Copyright © 2001 IEEE. All rights reserved.

4.4.2 Antenna calibration

All antennas shall be individually calibrated to a reference antenna or by other methods, using instruments traceable to the NIST or equivalent standards organization. Antennas shall be calibrated when damage or deterioration is suspected and at regular intervals, as described in 4.4.1.

Reference antennas that are used only for calibration purposes shall be constructed as specified and should be checked at least every three years in accordance with ANSI C63.5-1988 or ANSI C63.5-1998.

Antennas for use below 30 MHz shall be calibrated using one of the methods in ANSI C63.5-1988 and ANSI C63.5-1998.

Antennas for use from 30 to 1000 MHz shall be calibrated in accordance with the methods specified in ANSI C63.5-1988 and ANSI C63.5-1998. Adjustable (tunable) dipole antennas used below 80 MHz while fixed-tuned at 80 MHz resonant length shall also be calibrated at that fixed length for the range of frequencies of use. Antennas for use at or above 1 GHz shall be calibrated in accordance with one of the methods in ANSI C63.5-1998 or IEEE Std 149-1979.

All antennas shall be calibrated at the application measuring distance for performing product measurements.

Note that for the present, antennas calibrated using ANSI C63.5-1988 and ANSI C63.5-1998 shall be used for performing NSA measurements for alternative test site validation (see 5.4.2).

NOTES

1—If the antenna is calibrated at a distance $\geq 2 \times a^2 / \lambda$, (where a is the maximum aperture dimension of the antenna—see Figure 5) it may be used to make measurements at any distance greater than $2 \times a^2 / \lambda$ with an error of less than 1 dB.

2—Gain standard horn antennas (sometimes called standard gain horn antennas) need not be calibrated beyond that which is provided by the manufacturer unless they are damaged or deterioration is suspected, or they are used at a distance closer than $2 \times a^2 / \lambda$. Gain standard horn antennas have gains that are fixed by their dimensions and dimensional tolerances.

4.4.3 LISN impedance and insertion loss measurements

The impedance and insertion loss of each LISN used in testing emissions shall be measured over the frequency range of use. The LISN shall be measured as it is used for testing a product. An acceptable procedure for performing these measurements is given in Annex F. See 5.2.3.1 for testing a permanently installed LISN. The LISN should be checked routinely to ensure acceptable performance. See 4.4.1.

4.4.4 Characterization of absorbing cable clamp

Absorbing clamps used to measure RF energy radiated from cables, should be characterized in accordance with Annex H of CISPR Publication 16, which is summarized in Annex G.

4.4.5 Cable insertion loss

The insertion loss of cables used for connection of antennas or transducers to measuring instruments (radio-noise meters, spectrum analyzers, etc.) shall be characterized in accordance with ISO 10012-1:1992, and checked frequently for deterioration caused by use and environmental exposure.

 Copyright © 2001 IEEE. All rights reserved.

5. Test facilities

Radiated and ac powerline conducted emission measurements shall be made in an environment that ensures valid, repeatable measurement results as described in 5.2 (ac powerline conducted emission test sites) or 5.3, 5.4, and 5.5 (radiated emission test sites). Where appropriate, tests may be made at the manufacturer's location or the user's installation (5.6). In any case, the requirements of 5.1 shall be observed.

5.1 General requirements

5.1.1 Power source

Sufficient power shall be available to operate the EUT at its rated voltage, current, power, and frequency.

5.1.2 Ambient radio noise and signals

AC powerline conducted and radiated ambient signal levels, measured at the test site with the EUT de-energized should be at least 6 dB below the allowable limit of the applicable specification or standard. In the event that the measured levels of ambient plus EUT radio noise are not above the applicable limit, the EUT shall be considered to be in accordance with the limit.

If the ambient field or the powerline ambient level exceeds the applicable limit(s), the following alternatives may be used:

a) In the case of radiated emission measurements, perform measurements at the closest distance permitted by 5.4.1 and extrapolate results to the specified limit distance. The method of extrapolation shall be justified and described in the test report.

b) Perform radiated emission measurements of critical frequency bands during hours when broadcast stations are off the air and at times when ambients from industrial equipment are reduced to less than the 6 dB level.

c) Perform measurements in an absorber-lined shielded room (see 5.4.2 for conditions of use).

d) Make ac powerline conducted emission measurements in a shielded enclosure. However, this method is recommended only at frequencies below the resonant frequencies of the enclosure, usually under 30 MHz.

e) For ac powerline conducted emission measurements, insert suitable powerline filters between the power source and the LISN.

f) Orient the radiated emission test site to discriminate against such ambient signals insofar as possible.

g) If the signal being measured is narrowband and the ambient electric field is broad band, reduce the bandwidth of the receiver.

h) Rotate the EUT on a turntable while observing possible correlation between radiated emission amplitude and EUT azimuth.

i) Monitor the radio-noise meter audio with a loudspeaker or headphones and its video with a time-based oscilloscope display to discriminate between ambient noise and signals and EUT emissions.

5.2 AC powerline conducted emission test requirements

AC powerline conducted emission measurements may be made at a facility that meets the requirements of this clause. This may include a shielded (screened) room or a radiated emission test site.

Copyright © 2001 IEEE. All rights reserved.

5.2.1 Reference groundplane

The reference groundplane for measuring ac powerline conducted emissions is to consist of a floor earth-grounded conducting surface, which may be the metal floor of a shielded test chamber. The reference groundplane is to be at least 2 m by 2 m in size, and shall extend at least 0.5 m beyond the vertical projection (footprint) of the EUT or EUT arrangement. If the EUT normally does not make electrical contact with a groundplane, the reference groundplane shall be covered by insulating materials up to 12 mm thick.

5.2.2 Vertical conducting plane

For measurements of ac powerline conducted emissions on a tabletop device, a vertical conducting plane or screen of at least 2 m by 2 m in size, shall be, if used, located 40 cm to the rear of the EUT. The vertical conducting plane or screen shall be electrically connected to the reference groundplane at intervals not greater than 1 m along its entire length through low impedance connections, e.g., 3 cm-wide metal straps. The metal wall of a screen room will normally satisfy this requirement.

A tabletop device may be measured for ac powerline conducted emissions without a vertical conducting plane while maintaining the 80 cm EUT elevation specified in 6.2.1. However, in case of a dispute, ac powerline conducted emission measurements made on a tabletop device with a vertical, conducting plane in place shall take precedence.

A vertical, conducting plane is not required for ac powerline conducted emissions measurements on a floor-standing device. A vertical, conducting plane shall not be used for any radiated emission measurements.

5.2.3 LISN installation

LISNs may be required for ac powerline conducted emission measurements and may be used for radiated emission measurements. For exceptions, see 5.6.

5.2.3.1 LISN connected to the reference groundplane

Where use of an LISN is required (see Clause 7), it shall be placed on and electrically bonded to the top surface of, or immediately beneath, the reference groundplane and bonded to the groundplane. If LISNs are kept on the test site for radiated emission measurements, it is preferred that they be installed under the reference groundplane with the ac power receptacle flush with the reference groundplane. Otherwise, NSA requirements may not be able to be met.

The impedance at the receptacle end of any cable connected to the EUT end of the LISN (as contrasted to the impedance at the LISN terminals given in Figure 1), with the measuring instrument port of the LISN terminated in 50 Ω, shall be within +30% and –20% of the nominal LISN impedance shown in Figure 1 over the frequency range of the network to be used. See 4.1.2. If the attenuation (insertion loss) between the EUT receptacle and the measuring instrument port on the LISN is more than 0.5 dB, (see Annex F as an example of a method of measurement) it shall be taken into account when calculating the EUT emission levels. The site reference groundplane is the ground reference for the LISN.

Ambient noise may be present on the ac powerlines at some locations and at some frequencies within the frequency range of interest. If the levels are sufficient to cause interference with readings made using an LISN, filtering of the ac power may be required. The filter should be inserted between the ac power supply and the ac input connection to the LISN, preferably as close as possible to the LISN to reduce interference pickup by the leads between the filter and the LISN.

Where an isolation transformer is used between the ac power supply and the LISN, care shall be taken to ensure that this transformer's rating is large enough to not affect the peak current drawn by the EUT (this may require up to ten times the kilovolt-ampere rating of the EUT). If other than air core inductors are used in the LISN, they shall be in a linear permeability range at the peak currents drawn by the EUT.

 Copyright © 2001 IEEE. All rights reserved.

5.2.4 Voltage probe

If use of an LISN is impossible because of high current requirements of the EUT, or if a reference groundplane is not available, ac powerline conducted emission measurements shall be performed using the voltage probe, as discussed in 4.1.3. See also 5.6.

5.3 Radiated emission tests (below 30 MHz)

For magnetic field strength measurements (see 8.2.1), a site similar to that of Figure 5 should be used, except that a reference groundplane is not required. If a reference groundplane is present, the measured level of emissions may be higher than if measurements were made without a groundplane. Magnetic field strength measurements made at a site with no reference groundplane shall take precedence. If permitted by the procuring or regulatory agency, measurements may also be made in a shielded enclosure at frequencies below its resonant frequency, or in a TEM device (see Annex M).

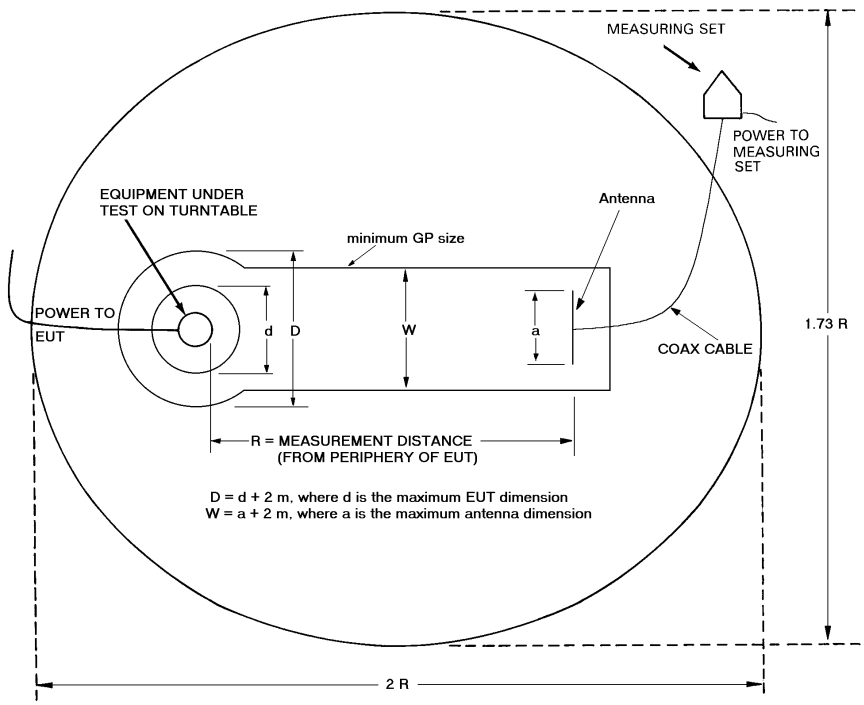

AREA DIMENSIONS =

R = 3m	R = 10 m	R = 30 m
6 m x 5.2 m	20 m x 17.3 m	60 m x 52 m

Figure 5—Radiated emissions measurements obstruction-free area and minimum size of groundplane for test site with a turnable

5.4 Radiated emission tests (30 MHz to 1 GHz)

The requirements for facilities used to make radiated emission measurements between 30 MHz and 1 GHz are as listed in the following subclauses.

Copyright © 2001 IEEE. All rights reserved.

5.4.1 Standard test site

The standard test site shall be an open, flat, level area that is clear of overhead wires and reflecting structures, and sufficiently large to permit measuring antenna placement at the specified distance. Adequate spacing shall also be provided between the site, including the EUT and the measuring antenna, and any adjacent, large reflecting structures. Reflecting structures are defined as objects or housings that are conductive or become conductive over time; e.g., structures may absorb conductive airborne contaminants when in use. Test personnel shall not be permitted within the perimeter of the area during testing. The floor of the site shall be covered by a conductive metal groundplane as described in 5.4.3. ANSI C63.7-1992 provides additional important guidance on the desired characteristics, construction, and deterioration possibilities of standard sites. A suggested layout for the standard site is diagrammed in Figure 5, where the recommended EUT-to-antenna distances *R* are 3, 10, and 30 m (by measurement along the main EUT to measurement antenna axis). A standard test site shall comply with the NSA requirements of 5.4.6.

5.4.2 Alternative test sites

Measurements may be made at facilities that differ from the standard test site. Alternative test sites include RF absorber-lined, metal test chambers, office or factory buildings, and weather-protected OATS with covering structures that are or become significantly reflective with weather. Such alternative sites shall comply with the volumetric NSA requirements of 5.4.6.5 over the volume occupied by the EUT, or the EUT arrangement. Metal shield enclosures and other sites that do not comply with the volumetric NSA requirements may be used only for exploratory radiated emission measurements unless it can be demonstrated that the results achieved are equivalent to those obtained at a standard or alternative site that complies with the appropriate NSA requirement. Measurements may also be made in a TEM device under certain conditions (see Annex M).

5.4.3 Reflecting groundplane

A reflecting groundplane shall be installed on the floor of the radiated electric field emission test site to provide a uniform, predictable reflection of radiated emissions measured at the site. The groundplane shall be constructed of metallic material with limited discontinuities and sufficiently high conductivity and surface smoothness to ensure compliance with the NSA requirements. The surface smoothness of the groundplane shall comply with the maximum values for terrain roughness defined by the Rayleigh criterion, as shown in ANSI C63.7-1992. Groundplanes with discontinuities (including connection point separation between adjacent metallic material) larger than 3.0 cm or overall size less than the minimum configuration shown in Figure 5, are not recommended. See ANSI C63.7-1992 for guidance.

5.4.4 EUT turntable

A continuously rotatable, remotely controlled turntable shall be used for installation at the test site to support the EUT and facilitate determination of the direction of maximum radiation at each EUT emission frequency. For floor-standing EUTs, the turntable shall be metal covered and flush with the groundplane. For tabletop EUTs, the turntable may be nonmetallic and located on top of the reference groundplane. Turntable design and operation should be based on the radiated emission measurement requirements specified in 8.1 and adhere to the reflecting structure and groundplane limitations that ensure compliance with the NSA requirements. See ANSI C63.7-1992 for additional specific guidance on turntable installations.

5.4.5 Antenna positioner

A continuously variable height, remotely controlled antenna positioner is recommended for installation at the site to support the measuring antenna and facilitate determination of the height of maximum radiation at each EUT emission frequency, over a range of 1 to 4 m above the reflecting plane. Antenna positioner design and operation should be based on the radiated emission measurement requirements specified in 8.1 and ensure compliance with the NSA requirements.

 Copyright © 2001 IEEE. All rights reserved.

5.4.6 Site quality validation

The quality of radiated emission sites shall be confirmed by measurement of the attenuation of signals propagated over the site and compared with theoretical attenuation of signals propagated over an ideal site. Horizontally and vertically polarized attenuation measurements shall be made over the frequency range 30 MHz to 1 GHz. These measurements shall be made in accordance with the procedures of 5.4.6.4 and 5.4.6.5 and the results normalized for comparison to the theoretical values.

NOTE—During site attenuation measurements, the receiving antenna positioner normally used and raised turntable, if used, shall be in place.

5.4.6.1 Acceptability criterion

The measured NSA for a radiated emissions test site shall be within ±4 dB of the theoretical NSA for an ideal test site. A discussion of site errors can be found in ANSI C63.6-1996, and in its Annex C possible corrective actions are suggested.

5.4.6.2 Validation interval

Validation of the acceptability criterion shall be confirmed in the first year. Subsequent validation intervals may be longer (up to three years) or shorter based on review of NSA data relative to the extent and severity of use of the site, weather effects on the site, drifting of reflective characteristics of covering structures of weather-protected OATS, and physical modifications made to the site or adjacent areas. The objective is to optimize the balance of risks and costs consistent with the required accuracy. See Annex A of ISO 10012-1:1992 for guidance.

5.4.6.3 Theoretical NSA

The theoretical NSAs for the most used measurement separations and antennas are shown in Table 1,Table 2, and Table 3 for an ideal site.

The theoretical NSA is developed and calculated in Smith, German, and Pate [B30]. Table 1, Table 2, and Table 3 are from [B12], Heirman [B16], Pate [B28], [B11], [B10], and [B29]. The mutual impedance correction factors for tuned dipole antennas were developed in [B29], have subsequently been revised in [B12] and [B28] and are shown in Table 4. The symbols for these tables are defined as follows:

R = Horizontal separation between the projection of the transmit and receive antennas on the reference groundplane (meters),

h_1 = Height of the center of the transmitting antenna above the reference groundplane (meters),

h_2 = Height of the center of the receiving antenna above the reference groundplane (meters).

NOTE—In the measurement procedure, h_2 is varied and the maximum received signal in the height scan range is used in the NSA measurements. f_M = frequency in megahertz, A_N = NSA. See Equation (1).

Table 1 is used for broadband antennas such as biconical and log periodic arrays. Table 2 is for tunable dipoles (and broadband antennas for alternative test site qualification) aligned horizontally with respect to the reference groundplane. Finally, Table 3 is for tunable dipoles, vertically aligned with respect to the reference groundplane. Note that in Table 3, there are restrictions in the scan height h_2. This takes into account the fact that the lowest tip of the receive dipole is kept 25 cm or more from the reference groundplane.

NSA for frequencies other than for those shown in the tables may be found using linear interpolation between the tabulated values.

Copyright © 2001 IEEE. All rights reserved.

NOTE—The spacing R between log-periodic array antennas is measured from the projection onto the reference groundplane of the midpoint of the longitudinal axis of each antenna.

5.4.6.4 NSA measurement: basic procedures

Two antennas are set up on the test site in an appropriate geometry as shown in Figure 6 and Figure 7. The NSA procedure requires two different measurements of the voltage received, V_R. The first reading of V_R is with the two coaxial cables disconnected from the two antennas and connected to each other via an adapter. The second reading of V_R is taken with the coaxial cables reconnected to their respective antennas and the maximum signal measured with the receive antenna scanned in height (Heirman [B17]). For both of these measurements, the signal source V_I, is kept constant. The first reading of V_R is called V_{Direct}, and the second is V_{Site}. These are used in the following Equation (1) for the measured NSA, A_{N}:

$$A_N = V_{\text{Direct}} - V_{\text{Site}} - AF_T - AF_R - \Delta AF_{TOT} \tag{1}$$

where

AF_{T} = Antenna factor of transmitting antenna (dB/m),

AF_R = Antenna factor of receiving antenna (dB/m),

AF_{TOT} = Mutual impedance correction factor (dB).

NOTE—The first two terms represent the actual measurement of site attenuations; i.e., $V_{\text{Direct}} - V_{\text{Site}}$ is equal to the classic site attenuation and

$$V_{\text{Direct}} = V_I - C_T - C_R \tag{2}$$

where C_T and C_R are the cable losses that do not need to be measured separately.

 Copyright © 2001 IEEE. All rights reserved.

Table 1— Theoretical normalized site attenuation for ideal site (recommended geometries for broadband antennas) [a]

Polarization R meters h_1 meters h_2 meters f_M (MHz)	Horizontal 3 1 1–4	Horizontal 10 1 1–4	Horizontal 30 1 1–4	Vertical 3 1 1–4	Vertical 3 1.5 1–4 A_N (dB)	Vertical 10 1 1–4	Vertical 10 1.5 1–4	Vertical 30 1 1–4	Vertical 30 1.5 1–4
30	15.8	29.8	47.7	8.2	9.3	16.7	16.9	26.0	26.0
35	13.4	27.1	45.0	6.9	8.0	15.4	15.5	24.7	24.7
40	11.3	24.9	42.7	5.8	7.0	14.2	14.4	23.5	23.5
45	9.4	22.9	40.7	4.9	6.1	13.2	13.4	22.5	22.5
50	7.8	21.1	38.8	4.0	5.4	12.3	12.5	21.6	21.6
60	5.0	18.0	35.7	2.6	4.1	10.7	11.0	20.0	20.0
70	2.8	15.5	33.0	1.5	3.2	9.4	9.7	18.7	18.7
80	0.9	13.3	30.7	0.6	2.6	8.3	8.6	17.5	17.5
90	–0.7	11.4	28.7	–0.1	2.1	7.3	7.6	16.5	16.5
100	–2.0	9.7	26.9	–0.7	1.9	6.4	6.8	15.6	15.6
120	–4.2	7.0	23.8	–1.5	1.3	4.9	5.4	14.0	14.0
140	–6.0	4.8	21.1	–1.8	–1.5	3.7	4.3	12.7	12.7
160	–7.4	3.0	18.9	–1.7	–3.7	2.6	3.4	11.5	11.6
180	–8.6	1.7	16.9	–1.3	–5.3	1.7	2.7	10.5	10.6
200	–9.6	0.6	15.2	–3.6	–6.7	1.0	2.1	9.6	9.7
250	–11.7	–1.6	11.6	–7.7	–9.1	–0.5	0.3	7.7	7.9
300	–12.8	–3.3	8.7	–10.5	–10.9	–1.5	–1.9	6.2	6.5
400	–14.8	–5.9	4.5	–14.0	–12.6	–4.1	–5.0	3.9	4.3
500	–17.3	–7.9	1.8	–16.4	–15.1	–6.7	–7.2	2.1	2.8
600	–19.1	–9.5	0.0	–16.3	–16.9	–8.7	–9.0	0.8	1.8
700	–20.6	–10.8	–1.3	–18.4	–18.4	–10.2	–10.4	–0.3	–0.9
800	–21.3	–12.0	–2.5	–20.0	–19.3	–11.5	–11.6	–1.1	–2.3
900	–22.5	–12.8	–3.5	–21.3	–20.5	–12.6	–12.7	–1.7	–3.4
1000	–23.5	–13.8	–4.5	–22.4	–21.4	–13.6	–13.6	–3.6	–4.3

[a] These data apply to antennas that have at least 25 cm of ground plane clearance when the center of the antenna is 1 m above the groundplane in vertical polarization.

Copyright © 2001 IEEE. All rights reserved.

Table 2—Theoretical normalized site attentuation for ideal site (recommended geometries for tunable dipoles and broadband antennas on alternative test sites, horizontal polarization)

Polarization R, meters h_1, meters h_2, meters f_M (MHz)	Horizontal 3[a] 2 1–4 A_N (dB)	Horizontal 10 3 1–4 A_N (dB)	Horizontal 30 2 1–4 A_N (dB)
30	11.0	24.1	41.7
35	8.8	21.6	39.1
40	7.0	19.4	36.8
45	5.5	17.5	34.7
50	4.2	15.9	32.9
60	2.2	13.1	29.8
70	0.6	10.9	27.2
80	–0.7	9.2	24.9
90	–1.8	7.8	23.0
100	–2.8	6.7	21.2
120	–4.4	5.0	18.2
140	–5.8	3.5	15.8
160	–6.7	2.3	13.8
180	–7.2	1.2	12.0
200	–8.4	0.3	10.6
250	–10.6	–1.7	7.8
300	–12.3	–3.3	6.1
400	–14.9	–5.8	3.5
500	–16.7	–7.6	1.6
600	–18.4	–9.3	0.0
700	–19.7	–10.7	–1.4
800	–20.9	–11.8	–2.5
900	–21.9	–12.9	–3.5
1000	–22.8	–13.8	–4.5

[a] The mutual impedance correction factors in Table 4 for horizontally polarized tunable dipoles spaced 3 m apart should be inserted in Equation (1) in 5.4.6.4 in determining the measured NSA data for comparison with the theoretical normalized site attenuation values for an ideal site given in this table.

 Copyright © 2001 IEEE. All rights reserved.

Table 3— Theoretical normalized site attenuation for ideal site (recommended geometries for tunable dipoles, vertical polarization)

f_M MHz	R = 3 m [a] h_1 = 2.75 m [a]		R = 10 m h_1 = 2.75 m		R = 30 m h_1 = 2.75 m	
	h_2(m)	A_N (dB)	h_2 (m)	A_N (dB)	h_2 (m)	A_N (dB)
30	2.75–4	12.4	2.75–4	18.6	2.75–4	26.3
35	2.39–4	11.3	2.39–4	17.4	2.39–4	24.9
40	2.13–4	10.4	2.13–4	16.2	2.13–4	23.8
45	1.92–4	9.5	1.92–4	15.1	1.92–4	22.7
50	1.75–4	8.4	1.75–4	14.2	1.75–4	21.8
60	1.50–4	6.3	1.50–4	12.6	1.50–4	20.2
70	1.32–4	4.4	1.32–4	11.3	1.32–4	18.9
80	1.19–4	2.8	1.19–4	10.2	1.19–4	17.7
90	1.08–4	1.6	1.08–4	9.2	1.08–4	16.7
100	1–4	0.6	1–4	8.4	1–4	15.8
120	1–4	–0.7	1–4	7.5	1–4	14.3
140	1–4	–1.5	1–4	5.5	1–4	13.0
160	1–4	–3.0	1–4	3.9	1–4	12.0
180	1–4	–4.5	1–4	2.7	1–4	11.1
200	1–4	–5.4	1–4	1.6	1–4	10.3
250	1–4	–7.0	1–4	–0.6	1–4	8.7
300	1–4	–8.9	1–4	–2.3	1–4	7.6
400	1–4	–11.4	1–4	–5.0	1–4	3.9
500	1–4	–13.4	1–4	–6.9	1–4	1.8
600	1–4	–14.9	1–4	–8.4	1–4	0.2
700	1–4	–16.3	1–4	–9.8	1–4	–1.2
800	1–4	–17.4	1–4	–11.0	1–4	–2.4
900	1–4	–18.5	1–4	–12.0	1–4	–3.4
1000	1–4	–19.4	1–4	–13.0	1–4	–4.3

[a] The mutual impedance correction factors in Table 4 for vertically polarized tunable dipoles spaced 3 m apart should be inserted in Equation (1) of 5.4.6.4 in determining the measured NSA data for comparison with theoretical NSA values or an ideal site given in this table.

Copyright © 2001 IEEE. All rights reserved.

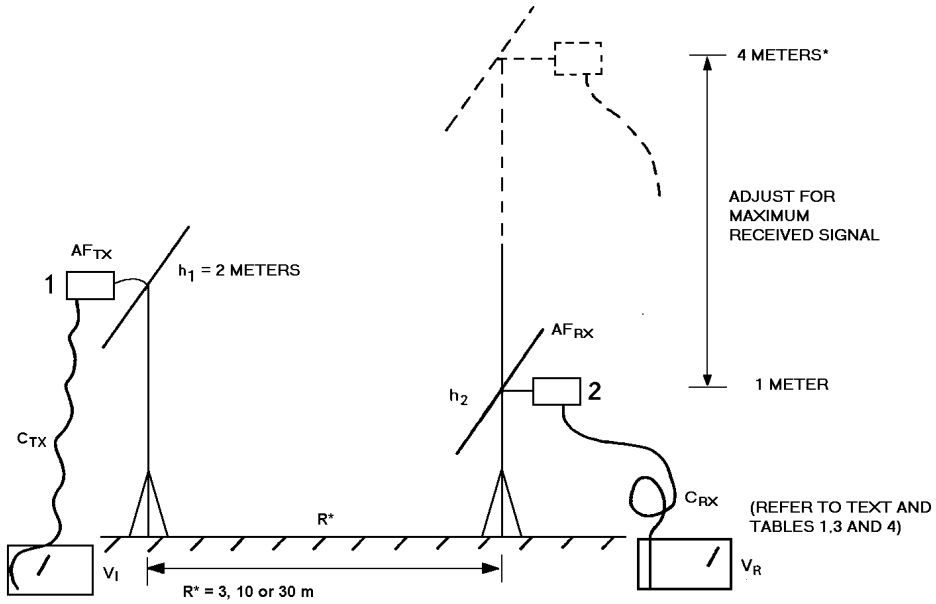

V$_I$ HELD CONSTANT

NOTE: * AT 30 METERS, TABLES 1, 2 AND 3 ACCOUNT FOR SCAN HEIGHTS OF 1 TO 4 METERS

Figure 6—Site attenuation measurement horizontal polarization, broadband, and tuned dipoles

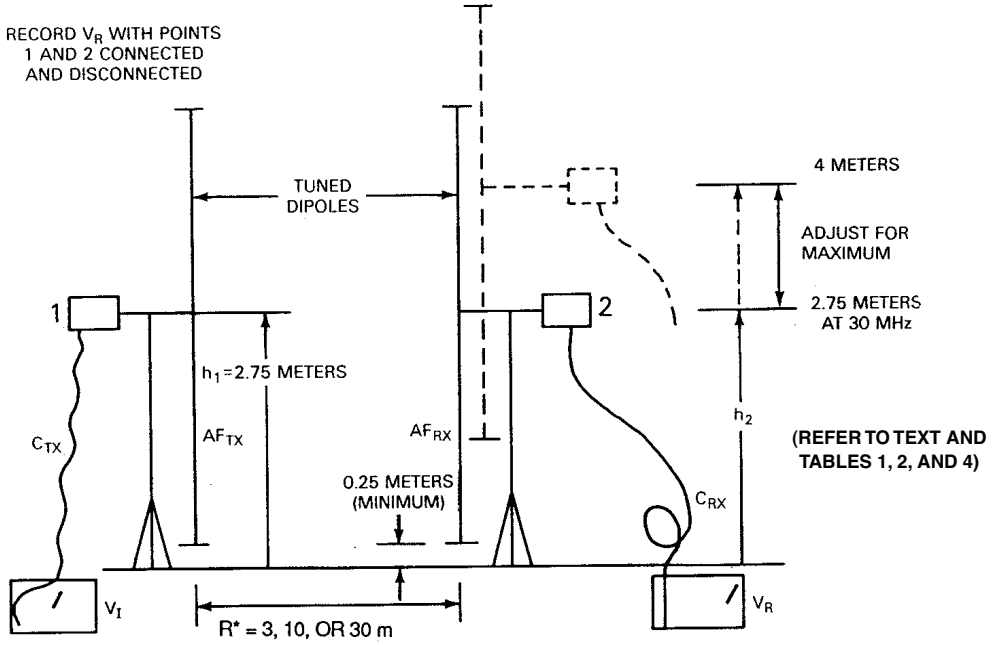

V$_I$ HELD CONSTANT

NOTE: h_1 = 1 m and h_2 = 1 m minimum for broadband antenna as specified in Table 1.

Figure 7—Site attentuation measurement vertical polarization using tuned dipole antennas

 Copyright © 2001 IEEE. All rights reserved.

AF_T and AF_R are determined as specified in ANSI C63.5-1988 and ANSI C63.5-1998. The mutual impedance correction factor in Table 4 applies only to the recommended site geometry of 3 m separation, both horizontal and vertical polarization, with the use of resonant tuned dipoles. $AF_{TOT} = 0$ for all other geometries and for broadband antennas in which mutual coupling effects are minimal.

Accurate antenna factors are necessary in determining the measured NSA. In general, antenna factors provided with the antenna are inadequate unless they were specifically or individually measured and the calibration is traceable to a national standard. Linearly polarized antennas are required. ANSI C63.5-1988 and ANSI C63.5-1998 contain a design of a reference antenna and methods for calibrating antennas. The reference dipole antenna (4.1.5.3) should be spot-checked against a known calibrated antenna. Antenna factors usually account for losses from the balun. If a separate balun or any integrally associated cables are used, their effects shall be accounted for.

Two procedures may be employed to determine the measured NSA: a discrete frequency method and a swept frequency method. The swept method may be used only with broadband antennas. Figure 6 shows the horizontal polarization geometry. In Figure 7, the recommended vertical polarization geometries for using tunable, resonant half-wave dipoles are shown. This assumes that the dipoles are tuned down to 30 MHz. The limiting factor of maintaining at least a 25 cm clearance between the lower tip of the receive and transmit antennas is covered by fixing the transmit height at 2.75 m and restricting the downward travel of the receive antenna. These restrictions are stated explicitly in Table 3. For vertical NSA measurements with broadband antennas, no such scan height restrictions are usually required because of the much smaller fixed dimensions of a broadband antenna compared with a tuned dipole, especially between 30 and 80 MHz. Using linearly polarized broadband antennas also usually allows a transmit antenna height of 1 m.

NOTES

1—For both methods, an impedance mismatch at the output of the signal source or at the input of the radio-noise meter or spectrum analyzer may result in cable reflections that could cause errors exceeding the NSA tolerance. This can be avoided by use of padding attenuators of 10 dB; one at the output end of each transmitting and receiving cable. These attenuators shall remain in the signal path for both V_{Direct} and V_{Site} measurements. Attenuator values of 6 dB are often adequate, and values as low as 3 dB can sometimes be used.

2—For vertically polarized antennas, it is especially important to keep the cables, leaving the antennas in the same horizontal plane as the center of the antenna, directly behind the antenna for a minimum distance of 1 m. Use of ferrite beads on both the transmit and receive antenna cables close to the antennas can help to eliminate common-mode signals that cause measurement errors.

For the discrete frequency method, specific frequencies given in Table 1, Table 2, and Table 3 are measured in turn. At each frequency the receive antenna is moved over the height range given in the appropriate table to maximize the received signal. These measured parameter values are inserted in Equation (1) to obtain the measured NSA. Annex A contains a suggested procedure involving a worksheet approach to record the data, calculate the measured NSA, and then compare it with the theoretical NSA.

For the swept frequency method, measurements using broadband antennas may be made using automatic measuring equipment having a peak hold (maximum hold) storage capability and a tracking generator. In this method, both antenna height and frequency are scanned or swept over the required ranges. The frequency sweep speed shall be much greater than the antenna height scan rate. Otherwise, the procedure is the same as in the previous paragraph. A detailed procedure is given in Annex B.

5.4.6.5 NSA for alternative test sites

For an alternative test site (see 5.4.2) a single-point NSA measurement is insufficient to pick up possible reflections from the construction or RF-absorbing materials comprising the walls and ceiling of the test site. For these sites, a “test volume” is defined as that volume traced out by the largest equipment or system to be tested as it is rotated about its center location through 360°, such as by a turntable. In evaluating the site, the transmit antenna shall be placed at various points within the test volume with both horizontal and vertical

Copyright © 2001 IEEE. All rights reserved.

polarization, such as illustrated in Figure 8a and Figure 8b (German [B15]). This may require a maximum of 20 separate site attenuation measurements, i.e., five positions in the horizontal plane (center, left, right, front, and rear, measured with respect to the center and a line drawn from the center to the position of the measuring antenna), for two polarizations (horizontal and vertical), and for two heights (1 and 2 m, horizontal) (1 and 1.5 m, vertical). The maximum height of the EUTs to be measured, above the reference groundplane, shall not exceed the height at which the volumetric measurements were performed. The maximum volumetric measurement height is to the top tip of the antenna used in the vertical orientation or horizontal orientation when performing NSA.

Table 4—Mutual impedance correction factors (Δ AF_{TOT}) for geometry using two resonant tunable Roberts dipoles spaced 3 m apart

f_M MHz	Horizontal Pol R = 3 m h_1 = 2 m h_2 = 1 to 4 m scan	Vertical Pol R = 3 m h_1 = 2.75 m h_2 = (see Table 3)
	ΔAF_{TOT}	
30	3.1	2.9
35	4.0	2.6
40	4.1	2.1
45	3.3	1.6
50	2.8	1.5
60	1.0	2.0
70	–0.4	1.5
80	–1.0	0.9
90	–1.0	0.7
100	–1.2	0.1
120	–0.4	–0.2
140	–0.1	0.2
160	–1.5	0.5
180	–1.0	–0.4

NOTE—Calculated for resonant dipoles with reference antenna baluns using Method of Moments. Theoretical free-space antenna factors are for ideal resonant dipoles with an assumed 0.5 dB balun loss (each antenna). If the actual balun loss is known, it should be used to provide an appropriate modification to each antenna factor used in arriving at the correction factors in this table. See Reference Antenna in ANSI C63.5-1988 or ANSI C63.5-1998. These correction factors do not completely describe antenna factors measured above a ground plane, e.g., at heights of 3 or 4 m, because these antenna factors differ from free-space antenna factors at the lower frequencies. However, within the error, and for baluns with substantially different loss than 0.5 dB, bounds described in ANSI C63.6-1996, the values are adequate to indicate site anomalies.

User is cautioned when using half-wavelength dipoles or antennas with other than reference antenna baluns. These may exhibit characteristics different than the reference antenna.

Mutual coupling correction factors for 10 and 30 m are under consideration. As an interim procedure, site adequacy can be assessed by considering these correction factors to be equal to zero for such geometries and for all measurements using a broadband antenna.

 Copyright © 2001 IEEE. All rights reserved.

These measurements are carried out with broadband antennas. Separation distances *R*, are measured with respect to the center of the transmit and receive antennas. The separation distance *R* shall be maintained for all measurements. This requires that the receive antenna be moved along the line in the directions shown in Figure 8a through Figure 8d to maintain the separation distance *R* constant for all transmit antenna positions.

Also, the transmit and receive antennas shall be aligned with the antenna elements parallel to each other and orthogonal to the measurement axis. This requires that for all transmit antenna positions off the centerline, for horizontal polarization, both antennas be rotated about a vertical axis so that the antenna elements remain parallel to each other while maintaining the correct polarization.

For vertical polarization, the off-center positions, of the transmit antenna are at the periphery of the test volume. Furthermore, the lower tip of the antenna shall be greater than 25 cm from the floor, which may require the center of the antenna to be slightly higher than 1 m for the lowest height measurement.

For horizontal polarization measurements in the left and right positions, if the distance between the construction or absorbing material on the side walls and the EUT periphery is at least 1 m, the center of the antenna may be moved toward the center position so that the extreme outside tip of the antenna is either at the test volume periphery or at a distance inward from the periphery by not more than 10% of the test volume diameter. The front and rear positions are at the periphery of the test volume.

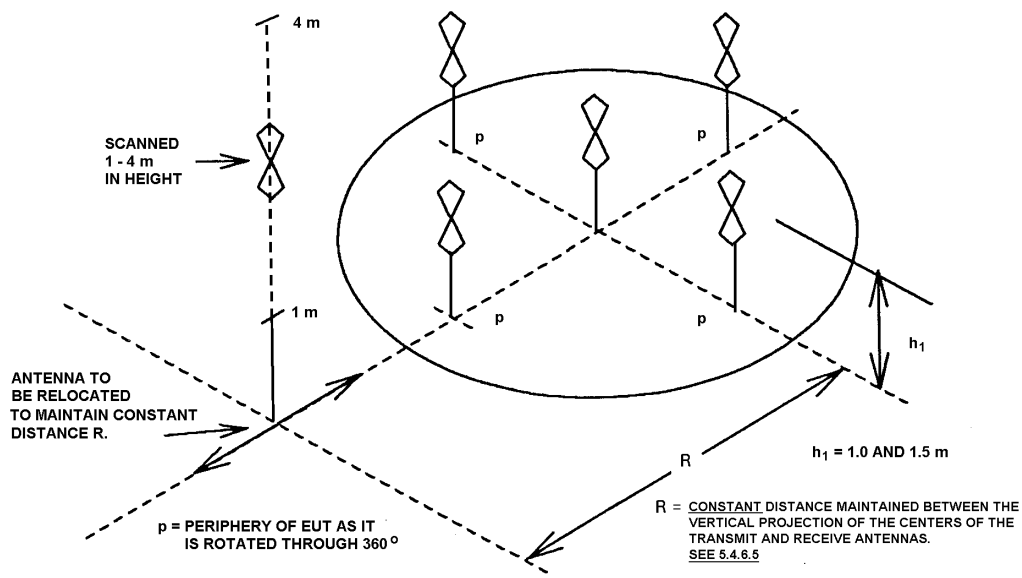

Figure 8a—Typical antenna positions for alternative test sites: Vertical polarization NSA measurements (antenna orientation adjusted as described in 5.4.6.5)

Copyright © 2001 IEEE. All rights reserved.

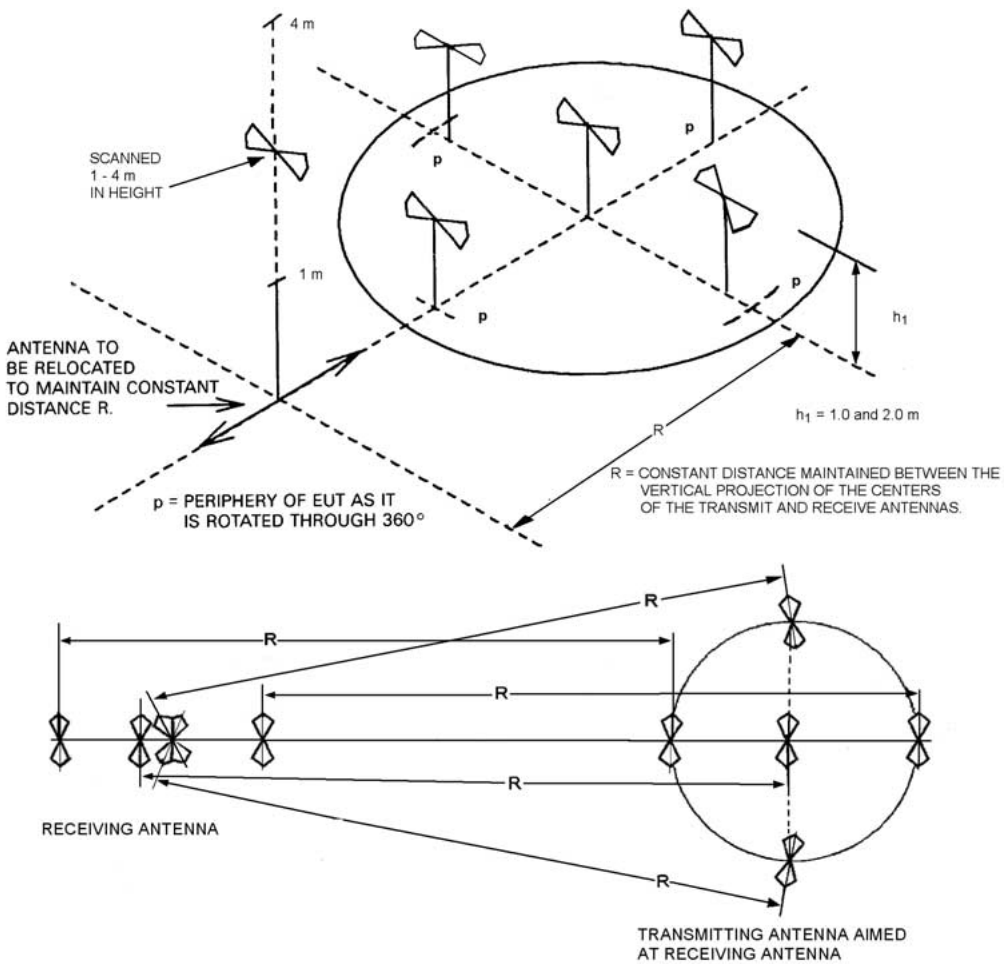

Figure 8b—Typical antenna positions for alternative test sites: Horizontal polarization NSA measurements

The number of required measurements can be reduced under the following circumstances:

a) The vertical and horizontal polarization measurements in the rear position may be omitted if the closest point of the construction or absorbing material is at a distance of greater than 1 m from the rear boundary of the test volume (see NOTE 1 below).

b) The total number of horizontal polarization measurements along the test volume diameter joining the left and right positions may be reduced to the minimum number necessary for the antenna footprints to cover 90% of that diameter.

c) The vertical polarization measurements at the 1.5 m height may be omitted if the top of the EUT, including any table mounting, is less than 1.5 m in height.

d) If the test volume is no larger than 1 m in depth, by 1.5 m in width, by 1.5 m in height, including table, if used, horizontal polarization measurements need to be made at only the center, front, and rear positions but at both the 1 m and 2 m heights. If a) applies, the rear position may be omitted. This will require a minimum of eight measurements: four positions vertical polarization (left, center, right, and front) for one height, and four positions horizontal polarization (center and front) for two heights; see Figure 8c and Figure 8d.

 Copyright © 2001 IEEE. All rights reserved.

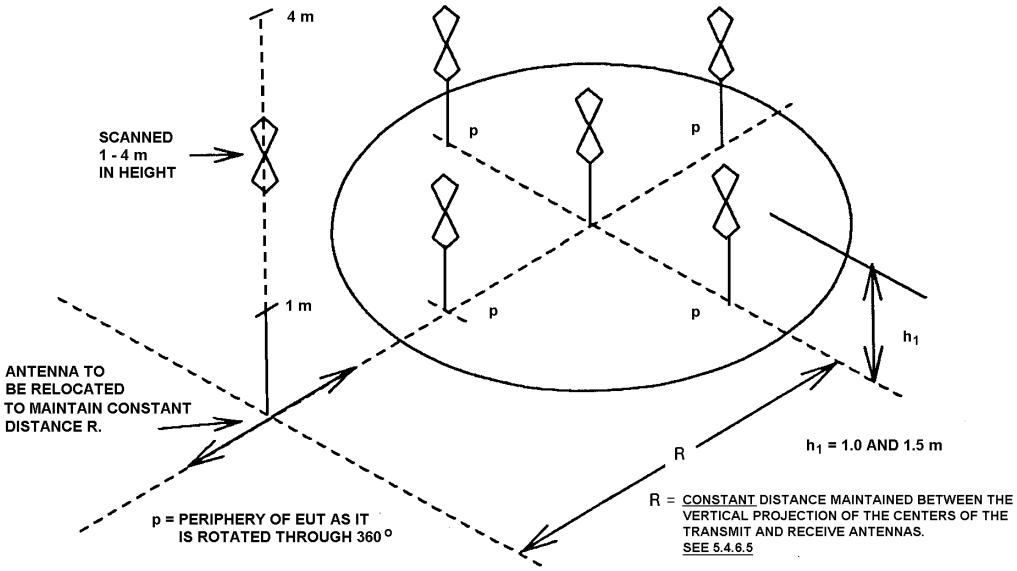

Figure 8c—Typical antenna positions for alternative test sites: Vertical polarization NSA measurements for an EUT that does not exceed a volume of 1.0 m depth, 1.5 m width, and 1.5 m height, with the periphery greater than 1.0 m from the closest material that may clause undesirable reflections

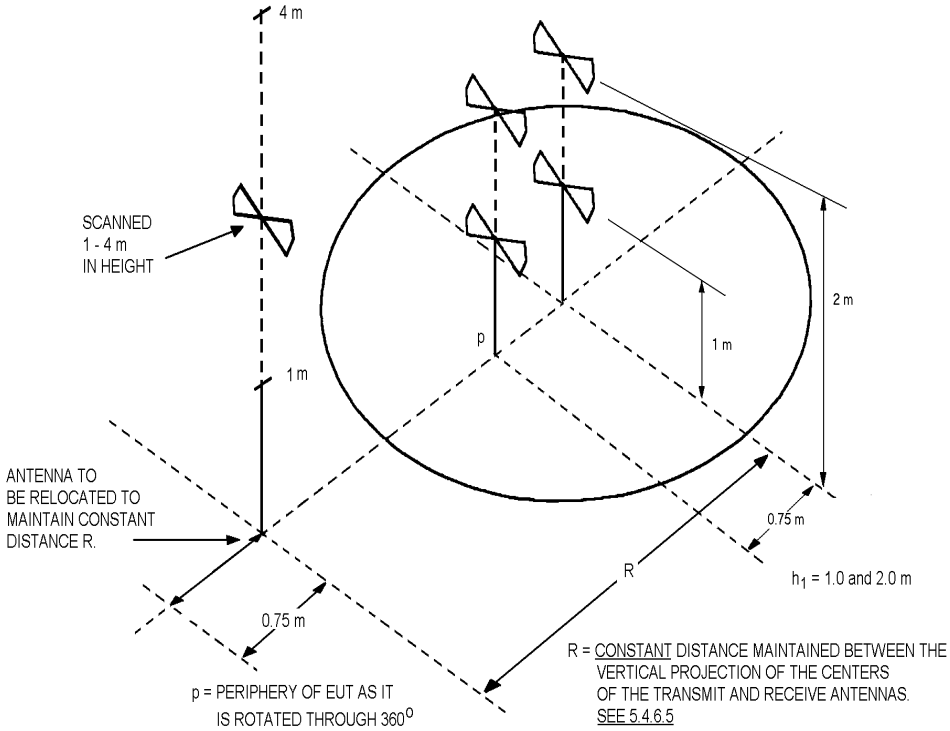

Figure 8d—Typical antenna positions for alternative test sites: Horizontal polarization NSA measurements for an ETU that does not exceed a volume of 1.0 m depth, 1.5 m width, and 1.5 m height, with the periphery greater than 1.0 m from the closest material that may cause undesirable reflections

Copyright © 2001 IEEE. All rights reserved.

NSA measurements shall be performed with the transmit and receive antenna separation held constant according to Table 1, Table 2, and Table 3. The receive antenna shall be moved along a line toward the turntable center to maintain the appropriate separation; see Figure 8a through Figure 8d. The alternative test site is considered suitable for performing radiated emissions testing if all NSA measurements prescribed above meet the requirements of 5.4.6.1 and the reference groundplane requirements of 5.4.3 (see NOTE 2).

NOTES

1—Radiated emissions sources located near dielectric interfaces such as absorbing pyramids or ferrite tiles have been shown to have variations in current distribution that can affect the radiation properties of the source at that location (Pate [B28]). When the EUT can be located near these interfaces, additional site attenuation measurements are required.

2—Studies are underway to determine if any further measurements are required to show alternative test site suitability.

5.5 Radiated emission test site requirements above 1 GHz

There are currently no test site validation requirements above 1 GHz. However, facilities suitable for measurements in the frequency range 30 MHz to 1000 MHz are considered suitable for the frequency range 1 GHz to 40 GHz, including the presence of the reference groundplane (see ANSI C63.7-1992).

NOTE—Additional site validation requirements above 1 GHz are currently under study.

5.6 Testing at manufacturer's location or user's installation

Testing is permitted at the end user's or manufacturer's premises, if the equipment cannot be set up on an OATS or alternative test site (see 8.3.2). In this case, both the equipment and its location are considered the EUT. The radiated emission test results are unique to the installation site because site containment properties affect the measurements. The ac powerline conducted emission test results also may be unique to the installation. However, where testing of a given system has been accomplished at three or more representative locations, the results may be considered representative of all sites with similar EUTs for the purposes of determining compliance with emission requirements (if allowed in the procuring or requirements standard). The voltage probe (see 4.1.3) shall be used for ac powerline conducted emission measurements. (See IEEE Std 139-1988 for additional information.)

Neither a reference groundplane nor an LISN shall be installed for user's installation testing unless one or both are to be a permanent part of the installation.

5.7 Artificial hand (CISPR publication 16, Part 1-1999, Clause 21)

If the EUT is normally operated while held in the hand, when required by the procuring organization, measurements shall be made using an artificial hand to simulate the effects of the user's hand. If the EUT can be operated either held in the hand or not, it shall be tested in both ways.

The following clauses contain information on detailed application of the artificial hand. See Annex K for details on the construction and use of the artificial hand.

5.7.1 Application of the artificial hand

When the case of the EUT is entirely of metal, no metal foil is needed, but the terminal M of the RC element shall be connected directly to the body of the EUT.

When the case of the EUT is of insulating material, metal foil shall be wrapped around the handle B (see Figure 9b and also around the second handle D, if present). Metal foil 60 mm wide shall also be wrapped

 Copyright © 2001 IEEE. All rights reserved.

around the body C at the point where the iron core of the motor stator is located or around the gear box if this gives a higher interference level. All of the pieces of metal foil and the metal ring or bushing A, if present, shall be connected together and to terminal M of the RC element.

When the case of the EUT is partly metal and partly insulating material, and has insulating handles, metal foil shall be wrapped around the handles B and D (Figure 9b). If the case is nonmetallic at the location of the motor, a metal foil 60 mm wide shall be wrapped around the body C at the point where the iron core of the motor stator is located, or alternatively around the gear box, if this is of insulating material and a higher interference level is obtained. The metal part of the body, the point A, the metal foil around the handles B and D, and the metal foil on the body C shall be connected together and to the terminal M of the RC element.

When a Class II EUT (without a ground wire) has two handles of insulating material, A and B, and a case of metal C, for example, an electric saw (Figure 9c), metal foil shall be wrapped around the handles A and B. The metal foil at A and B and the metal body C shall be connected together and to terminal M of the RC element.

NOTE—An artificial hand shall not be used when testing ITE.

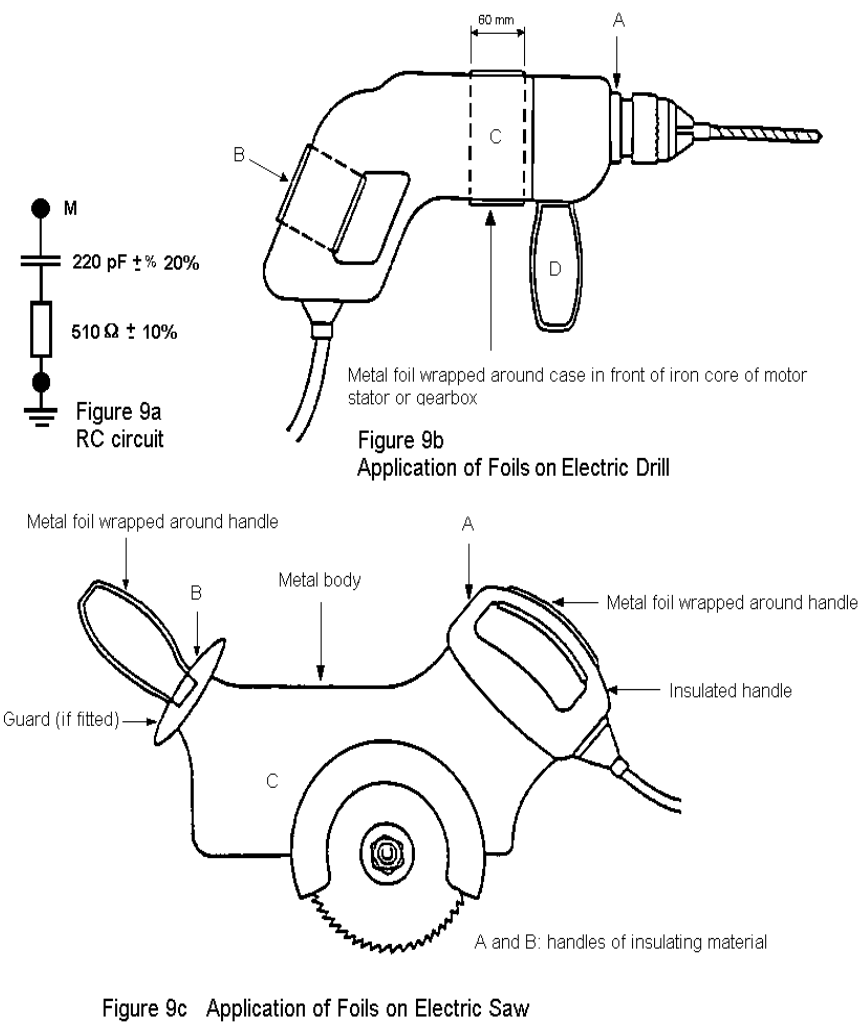

Figure 9—Application of foils on hand tools

Copyright © 2001 IEEE. All rights reserved.

6. General requirements for EUT equipment arrangements and operation

This clause specifies general requirements that are applicable to all EUTs covered under the scope of this standard. Additional and more detailed requirements on specific types of EUTs are given in Clause 11, Clause 12, and Clause 13.

6.1 Operating conditions

The EUT and accessories shall be operated at the rated (nominal) operating voltage and typical load conditions—mechanical, electrical, or both—for which they are designed. Loads may be actual or simulated as described in the individual equipment requirements. For some EUTs, it may be necessary to develop a set of explicit requirements specifying the test conditions, EUT operation, and so on, to be used in testing a specific EUT or class of EUTs for radio-noise emissions. Such requirements shall be documented in the report of measurements for the EUT and may be used in determining compliance with the limits.

The EUT shall be operated to ensure that all of the functions are exercised (software, etc.). For example, see 11.1 on ITE.

6.1.1 EUT

The EUT and accessories shall be placed in a typical arrangement as defined in 6.2.

6.1.2 Accessory equipment

Accessory equipment shall be placed in a typical arrangement as defined in 6.2.

6.1.2.1 Remotely located devices

In certain applications, a remotely located device may be connected to the EUT. In these cases, it is permissible for cabling from the remotely located device to the EUT or accessories to be placed directly on the reference groundplane or, if normally installed beneath the reference groundplane, beneath it. The remotely located device shall be located at a distance sufficient to ensure that it does not contribute to the measured level. This procedure evaluates the interference potential of the EUT, its accessories, and interconnecting cables or wires standing apart from the remotely located device, which in turn shall be evaluated separately, if required.

6.1.2.2 Distributed networks

Distributed networks, e.g., a local area network, may be simulated on the test site by a cable at least 1 m in length and an actual peripheral or a remote network communications simulator. The network simulator shall be located at a distance sufficient to ensure that it does not contribute to the measured level. Signals on the network by the EUT should be typical of normal operation. See 6.1.7 for use of simulators.

6.1.3 EUT ports (or terminals)

Interconnect cabling or wiring shall be connected to one of each type of functional port of the EUT, and each cable or wire shall be terminated in a device typical of actual usage. Where there are multiple ports all of the same type, additional connecting cables or wires shall be added to the EUT to determine the effect these cables or wires have on both radiated and conducted emissions from the EUT. The number of additional cables or wires should be limited to the condition where the addition of another cable or wire does not significantly affect the emission level, i.e., varies less than 2 dB, provided, of course, that the EUT remains compliant. These additional cables or wires need not be terminated.

 Copyright © 2001 IEEE. All rights reserved.

NOTE—Normally, the loading of similar connectors, terminals, or ports is limited by the following:

a) Availability of multiple loads (for large systems)

b) Reasonableness of multiple loads representing a typical installation

The rationale for the selection of the equipment configuration and loading of ports shall be included in the test report. Additional ports on support or interfacing units or simulators, other than those associated with the EUT or the minimum system required by 11.2 for ITE, need not be cabled or used during testing.

6.1.4 Interconnect and power cabling (or wiring)

All interconnecting cable lengths should be typical of normal usage. The interconnect cabling used during testing shall be the specific cabling marketed with the EUT in practical applications. Where cables of variable length are used with the EUT, the cables most typical of all applications shall be used throughout the testing. When cable length is unknown, cables of 1 m nominal length shall be used. The same type of cable (i.e., unshielded, braided, foil shield, etc.) specified in the user manual should be used throughout the tests.

For equipment tested on a tabletop, excess cable length shall be draped over the back edge of the tabletop. If any draped cable extends closer than 40 cm to the reference groundplane, the excess shall be bundled in the center in a serpentine fashion using 30 to 40 cm lengths in the center to maintain the 40 cm height. If the cables cannot be bundled because of bulk, length, or stiffness, they shall be draped over the back edge of the tabletop unbundled, but in such a way that all portions of the interface cable remain at least 40 cm from the horizontal reference groundplane. Interconnecting cables that are connected only between the EUT and the peripheral shall be bundled in the center to maintain the 40 cm height above the reference groundplane. The end of the cable may be terminated, if required, using the correct terminating impedance. The overall length of the bundled cable shall not exceed 1 m. See Figure 10a and Figure 11a. (For installations using overhead cables, see 6.1.4.1.)

For ac powerline conducted emission measurements, power cords of equipment other than the EUT do not require bundling. Drape the power cords of non-EUT equipment over the rear edge of the table, and route them down onto the floor of the conducted emission test site to the second LISN. These power cords of non-EUT equipment should not be draped over the top of an LISN. See Figure 10a.

For radiated emission measurements, all power cords drape to the floor and are routed over to the ac power receptacles (on the LISNs if used) (See Figure 11a).

For floor-standing equipment, excess interconnecting cable lengths shall be folded back and forth in the center to form a bundle between 30 and 40 cm in length. If the cables cannot be folded because of bulk, stiffness, or length, they shall be arranged in a serpentine fashion. Interconnecting cables that are not connected to a peripheral may be terminated, if required, using the correct terminating impedance. Cables that are normally grounded shall be grounded to the reference groundplane for all tests. Cables that are normally insulated from the ground shall be insulated from the reference groundplane by up to 12 mm of insulating material. For combined floor-standing and tabletop equipment, the interconnecting cable to the floor-standing unit, drapes to the reference groundplane with the excess bundled. Cables not reaching the reference groundplane are draped to the height of the connector or 40 cm, whichever is lower (see Figure 14, Note 6).

Copyright © 2001 IEEE. All rights reserved.

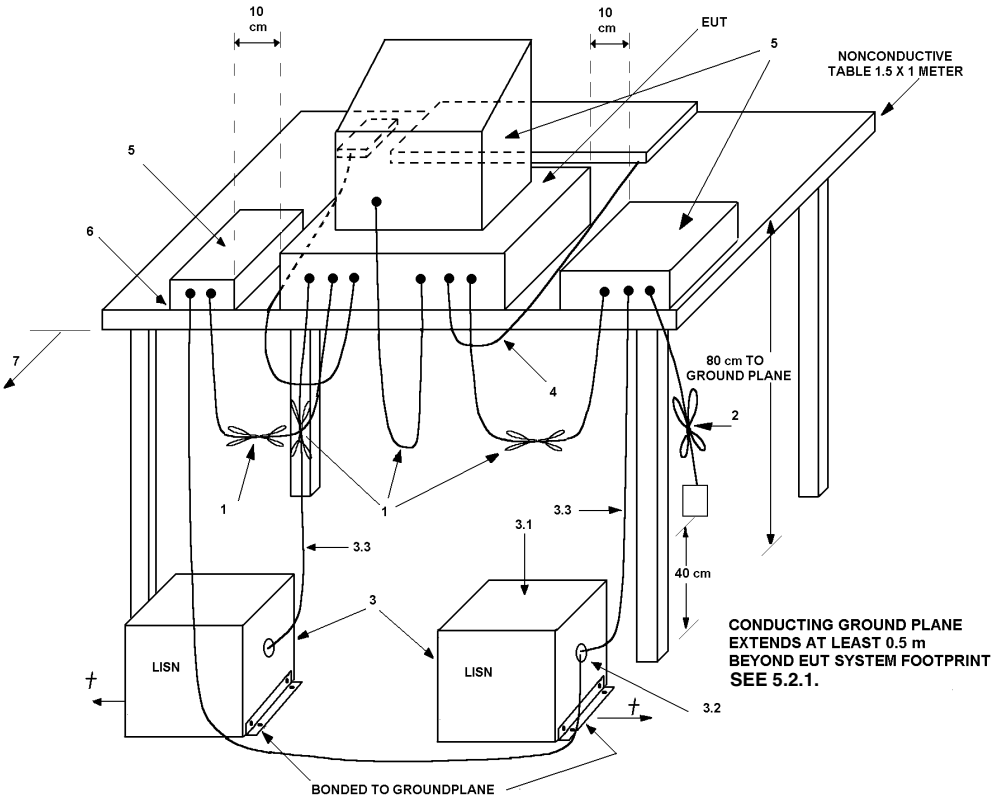

LEGEND:

1) Interconnecting cables that hang closer than 40 cm to the groundplane shall be folded back and forth in the center forming a bundle 30 to 40 cm long (see 6.1.4 and 11.2.4).
2) I/O cables that are not connected to a peripheral shall be bundled in the center. The end of the cable may be terminated, if required, using the correct terminating impedance. The overall length shall not exceed 1 m (see 6.1.4).
3) EUT connected to one LISN. Unused LISN measuring port connectors shall be terminated in 50 Ω. LISN can be placed on top of, or immediately beneath, reference groundplane (see 5.2.3 and 7.2.1).
   3.1) All other equipment powered from additional LISN(s).
   3.2) Multiple outlet strip can be used for multiple power cords of non-EUT equipment.
   3.3) LISN at least 80 cm from nearest part of EUT chassis.
4) Cables of hand-operated devices, such as keyboards, mice, etc., shall be placed as for normal use (See 6.2.1.3 and 11.2.4).
5) Non-EUT components of EUT system being tested (see also Figure 13).
6) Rear of EUT, including peripherals, shall all be aligned and flush with rear of tabletop (see 6.2.1.1 and 6.2.1.2).
7) Rear of tabletop shall be 40 cm removed from a vertical conducting plane that is bonded to the groundplane (see 5.2.2 for options).

Figure 10a—Test arrangement for conducted emissions

 Copyright © 2001 IEEE. All rights reserved.

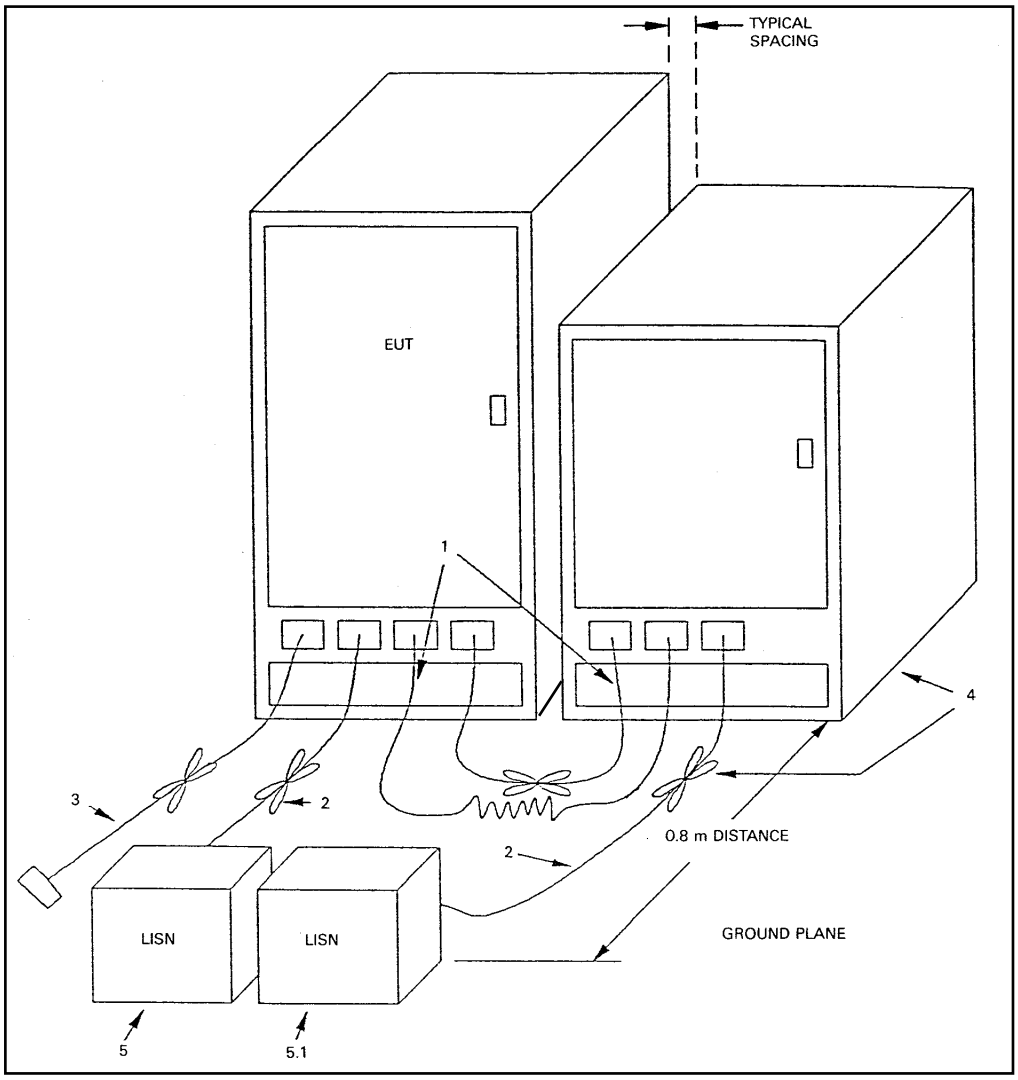

LEGEND:

1) Excess I/O cables shall be bundled in the center. If bundling is not possible, the cables shall be arranged in serpentine fashion. Bundling shall not exceed 40 cm in length (see 6.1.4 and 11.2.4).
2) Excess power cords shall be bundled in the center or shortened to appropriate length (see 7.2.1).
3) I/O cables that are not connected to a peripheral shall be bundled in the center. The end of the cable may be terminated, if required, using the correct terminating impedance. If bundling is not possible, the cable shall be arranged in serpentine fashion (see 6.1.4).
4) EUT and all cables shall be insulated, if required, from the groundplane by up to 12 mm of insulating material (see 6.1.4 and 6.2.2).
5) EUT connected to one LISN. LISN can be placed on top of, or immediately beneath, the groundplane.
   5.1) All other equipment powered from a second LISN or additional LISN(s) (see 5.2.3 and 7.2.11).
   5.2) Multiple outlet strip can be used for multiple power cords of non-EUT equipment.

Figure 10b—Test arrangement for conducted emissions floor-standing equipment

Copyright © 2001 IEEE. All rights reserved.

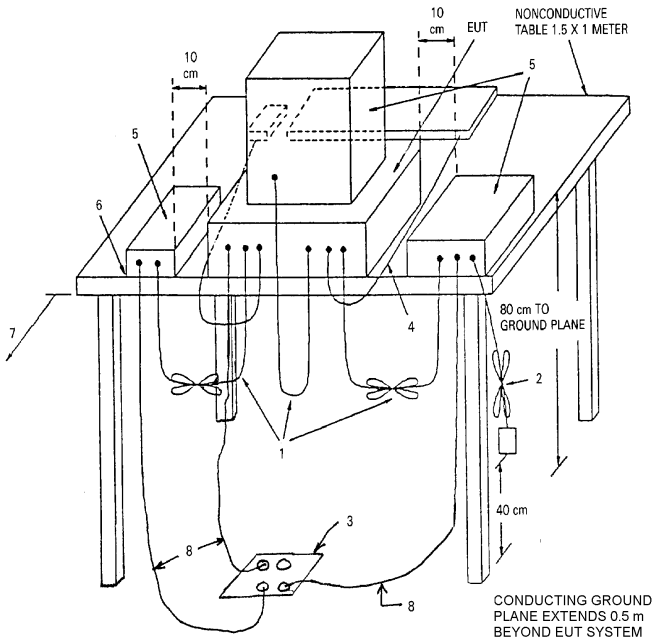

LEGEND:

1) Interconnecting cables that hang closer than 40 cm to the groundplane shall be folded back and forth in the center, forming a bundle 30 to 40 cm long (see 6.1.4 and 11.2.4).
2) I/O cables that are not connected to a peripheral shall be bundled in the center. The end of the cable may be terminated if required using the correct terminating impedance. The total length shall not exceed 1 m (see 6.1.4).
3) If LISNs are kept in the test setup for radiated emissions, it is preferred that they be installed under the groundplane with the receptacle flush with the groundplane (see 6.1.4).
4) Cables of hand-operated devices, such as keyboards, mice, etc., shall be placed as for normal use (see 6.2.1.3 and 11.2.4).
5) Non-EUT components of EUT system being tested (see also Figure 13).
6) Rear of EUT, including peripherals, shall all be aligned and flush with rear of tabletop (see 6.2.1.1 and 6.2.1.2).
7) No vertical conducting plane used (see 5.2.2).
8) Power cords drape to the floor and are routed over to receptacle (see 6.1.4).

Figure 11a—Test arrangement for radiated emissions tabletop equipment

 Copyright © 2001 IEEE. All rights reserved.

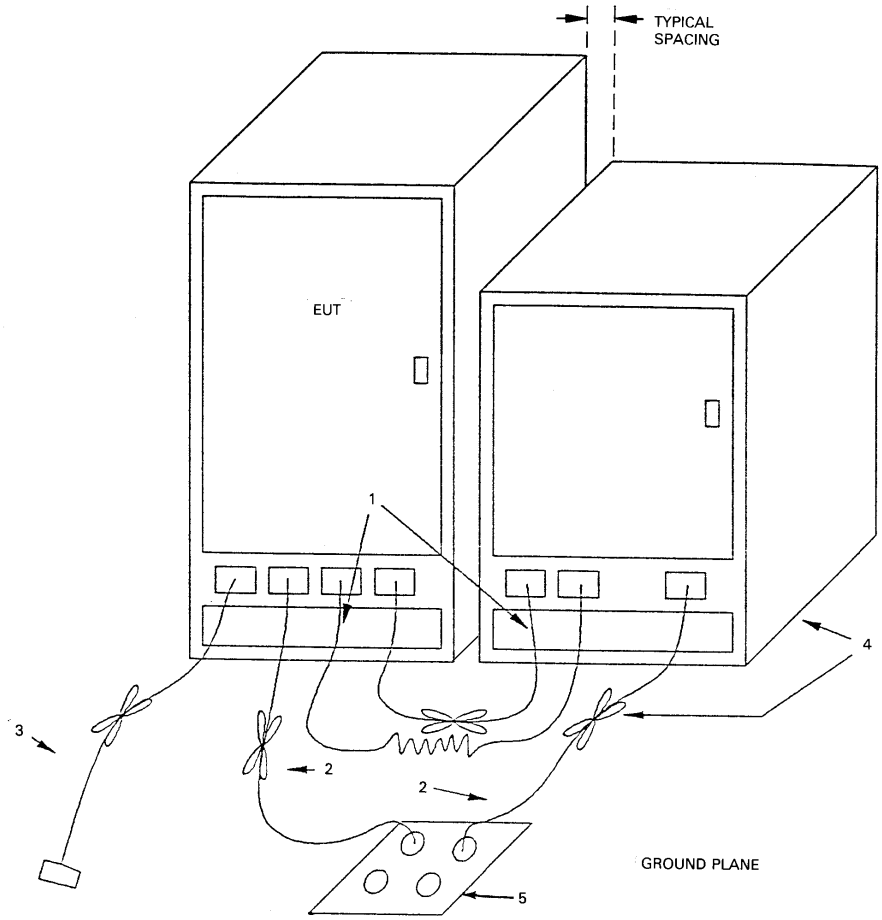

LEGEND:

1) Excess I/O cables shall be bundled in center. If bundling is not possible, the cables shall be arranged in serpentine fashion. Bundling not to exceed 40 cm in length (see 6.1.4).
2) Excess power cords shall be bundled in the center or shortened to appropriate length (see 7.2.1).
3) I/O cables that are not connected to a peripheral shall be bundled in the center. The end of the cable may be terminated, if required, using the correct terminating impedance. If bundling is not possible, the cable shall be arranged in a serpentine fashion (see 6.1.4).
4) EUT and all cables shall be insulated, if required, from the groundplane by up to 12 mm of insulating material (see 6.1.4 and 6.2.2).
5) If LISNs are kept in the test setup for radiated emissions, it is preferred that they be installed under the groundplane with the receptacle flush with the ground plane (see 5.2.3 and 8.1).

Figure 11b—Test arrangement for radiated emissions floor-standing equipment

Copyright © 2001 IEEE. All rights reserved.

6.1.4.1 Overhead cable trays and suspended ceilings

Where overhead cable trays or suspended ceilings are used to support overhead cables, tests may be performed with overhead cable trays or suspended ceilings as shown in Figure 12a and Figure 12b. The trays or ceilings should be representative of a typical installation. Care is needed to precisely define the cable layout to be able to repeat the emission measurements.

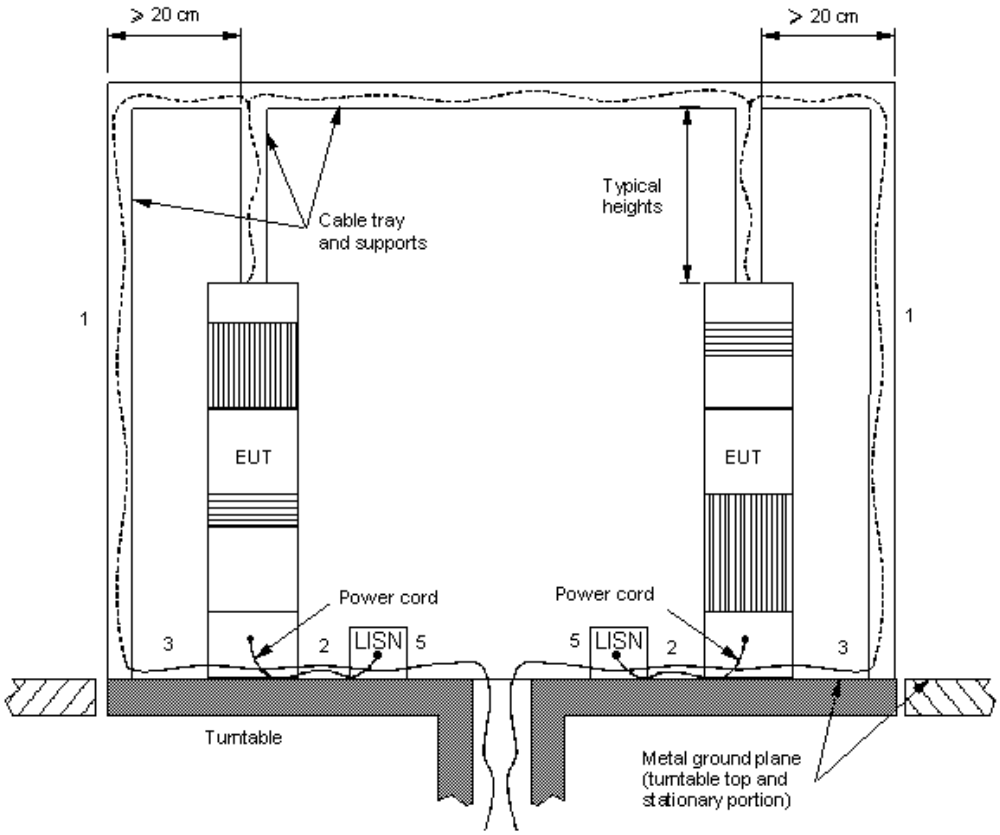

LEGEND:

1) Only one vertical riser may be used where typical of system under test.
2) Excess power cord shall be bundled in the center or shortened to appropriate length.
3) EUT and cables shall be insulated from groundplane by up to 12 mm. Where the manual has specified or there exists a code of practice for installation of the EUT, the test arrangement shall allow the use of this practice for the tests.
4) Power cords being measured connected to one LISN. All other system power cords powered through other LISN(s). A multiple receptacle strip may be used for other power cords.
5) For *conducted* tests, the LISNs may be placed on top of or immediately beneath and bonded directly to the groundplane.
   For *radiated* tests, the LISN(s), if used, should be installed under, with the receptacle flush with the groundplane.

Figure 12a—Test arrangement for floor-standing equipment (overhead cables—side view)

 Copyright © 2001 IEEE. All rights reserved.

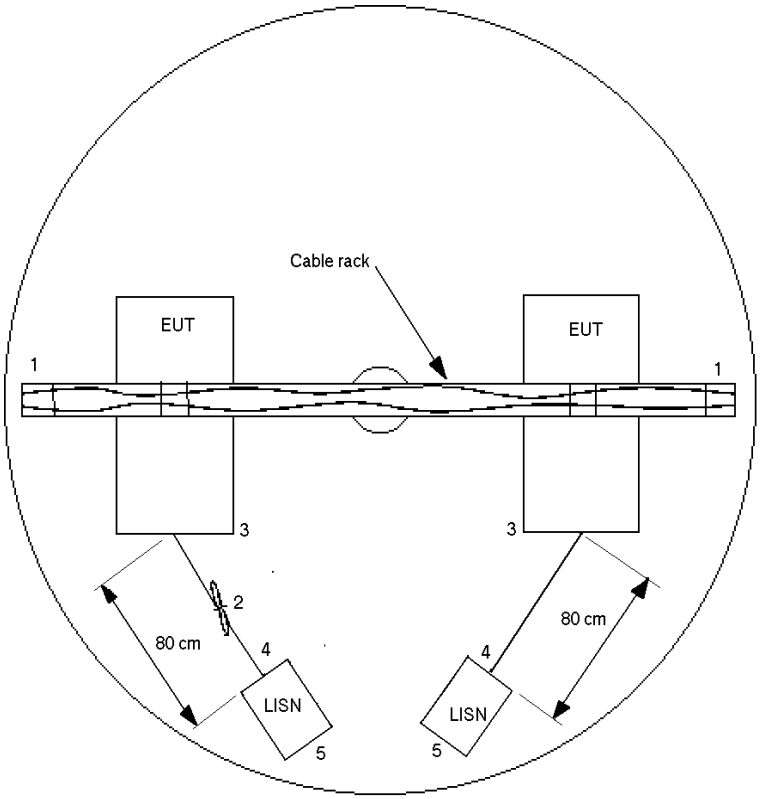

LEGEND:

1) Only one vertical riser may be used where typical of system under test.
2) Excess power cord shall be bundled in the center or shortened to appropriate length.
3) EUT and cables shall be insulated from groundplane by up to 12 mm. Where the manual has specified or there exists a code of practice for installation of the EUT, the test arrangement shall allow the use of this practice for the tests.
4) Power cords being measured connected to one LISN. All other system power cords powered through other LISN(s). A multiple receptacle strip may be used for other power cords.
5) For c*onducted* tests, the LISNs may be placed on top of or immediately beneath and bonded directly to the groundplane.
   For *radiated* tests, the LISN(s), if used, should be installed under, with the receptacle flush with the groundplane.

Figure 12b—Test arrangement for floor-standing equipment (overhead cables—top view)

Copyright © 2001 IEEE. All rights reserved.

6.1.5 Modular equipment

Equipment that is comprised of a unit populated with multiple plug-in printed circuit boards, modules, enhancement cards, coprocessors, and so on, shall be tested with a mixture of plug-ins representative of that used in a typical installation. For installations with a large number of plug-ins, a limited number of representative plug-ins may be used. The number of additional plug-ins actually used should be limited to the number for which the addition of another plug-in does not significantly affect the conducted or radiated emission level, i.e., varies less than 2 dB, provided, of course, that the emission level remains compliant. If applicable, each added plug-in shall have an interconnect cable or wire connected to it. These additional cables need not be terminated unless those boards are used in configuring a minimum system, such as defined in 11.2. The rationale used for selecting the number of plug-ins should be stated in the test report.

6.1.6 Grounding

The EUT shall be grounded in accordance with the individual equipment requirements and conditions of intended use. When the EUT is furnished with a grounding terminal or internally grounded lead, and when this terminal or lead is used in actual installation conditions, the terminal or lead shall be connected to the reference groundplane or under the floor in a raised floor installation, simulating actual installation conditions. Any internally grounded lead included in the plug end of the ac power cord of the EUT shall be connected to the ground through the utility power service (see also 7.2).

6.1.7 Simulators

In case the EUT is required to interact functionally with other units, the actual interfacing units shall be used to provide representative operating conditions unless there is some justified reason for using a simulator. If a simulator is used, it shall represent the common-mode and differentials mode RF impedance of the interface unit, and the reasons for its use shall be documented. For communication networks simulation, see 6.1.2.1.

6.1.8 Shock and vibration isolators

The EUT shall be secured to mounting bases having shock or vibration isolators, if such mounting bases are used in the normal installation. Any bonding straps furnished with the mounting base shall be connected to the reference groundplane. When mounting bases do not have bonding straps, bonding straps shall not be used in the test arrangement.

6.1.9 Temperature and humidity

The ambient air temperature of the test site shall be within the range of 10 to 40 °C (50 to 104 °F) unless the EUT requirements specify testing over a different temperature range. The EUT and the measuring equipment shall be operated until temperature stable before the testing proceeds. The warm-up time shall be included along with the measurement results if the ambient conditions are outside of the range stated above, and evidence shall be given that the measuring equipment is accurate at the temperatures used.

Humidity levels shall be in the range of 10% to 90% relative humidity unless the EUT operating requirements call for a different level. Unless specifically called out in the EUT requirements, there should be no condensation of moisture on the EUT. The ambient temperature and humidity levels shall be recorded and included in the test report if critical to the test results.

6.1.10 Special instrumentation

During the time radio-noise measurements are being made, external electrical meters or electrical indicating devices shall not be in the input or output circuits of the EUT, except those normally used with the measuring equipment.

 Copyright © 2001 IEEE. All rights reserved.

6.2 Arrangement of EUT

The EUT shall be carefully installed, arranged, and operated in a manner that is most representative of the equipment as typically used (i.e., as specified in the EUT instruction manual) or as specified herein. Equipment that typically operates within a system made of multiple interconnected units should be tested as part of such a typical operational system.

Generally, the system that is tested shall be based on that typically marketed to the end user. If the marketing information is not available or it is not practical to assemble extraordinary amounts of equipment to replicate a complete marketed product installation, the test shall be performed using the best judgment of the test engineer in consultation with the design engineering staff. The results of any such discussion and decision process shall be reported in the test report. A photograph or detailed drawing shall be used to document the equipment arrangement and shall be part of the test report.

In order to replicate emission measurements, it is important to document the arrangement of the system components, cables, wires, and ac power cords. There are three general equipment test arrangements: tabletop, floor-standing, and combination defined for testing all classes of devices as described below.

6.2.1 Tabletop equipment tests

Portable, small, lightweight, or modular devices that may be hand-held, worn on the body, or placed on a table during operation shall be positioned on a nonconducting platform, the top of which is 80 cm above the reference groundplane. Ceiling and wall-mounted devices shall also be positioned on a tabletop for testing purposes. The preferred area occupied by the EUT arrangement is 1 m by 1.5 m, but it may be larger or smaller to accommodate various sized EUTs. (See Figure 10a, Figure 11a, and Figure 13.)

6.2.1.1 Placement of tabletop EUTs

For tabletop systems, the EUT shall be centered laterally on the tabletop and its rear shall be flush with the rear of the table. If the EUT is a stand-alone unit, it shall be placed in the center of the tabletop.

6.2.1.2 Placement of tabletop accessories/peripherals

Accessories/peripherals that are part of a system tested on a tabletop shall be placed in a test arrangement on one or both sides of the host with a 10 cm separation between the nearest points of the cabinets (see Figure 13). The rear of the host and accessories should be flush with the back of the supporting tabletop unless that would not be typical of normal use. If more than two accessories are present, an equipment test arrangement should be chosen that maintains a 10 cm spacing between cabinets unless the equipment is normally located closer together.

Multiple peripherals/accessories (more than two) may be distributed around the table as shown in Figure 13. If the EUT peripherals are designed to be stacked in typical use, they shall be stacked for emission testing occupying peripheral position 1 or 2. See Figure 13.

Accessories, such as ac power adapters, which are typically table-mounted because of cable length, shall be mounted on the tabletop in a typical manner.

Accessories, which are typically floor-mounted, shall occupy a floor position directly below the portion of the EUT to which they are typically connected.

6.2.1.3 Placement and manipulation of interconnect cabling (or wiring) of tabletop equipment

The system shall be arranged in one typical equipment arrangement for the test. In making any tests, involving several tabletop equipment interconnected by cables or wires, it is essential to recognize that the measured levels may be critically dependent on the exact placement of the cables or wires. Thus, exploratory

Copyright © 2001 IEEE. All rights reserved.

tests as specified in 7.2.3 and 8.3.1.1 shall be carried out while varying cable positions within typical arrangements to determine the maximum or near-maximum emission level. During manipulation, cables shall not be placed under or on top of the system units unless such placement is required by the inherent equipment design.

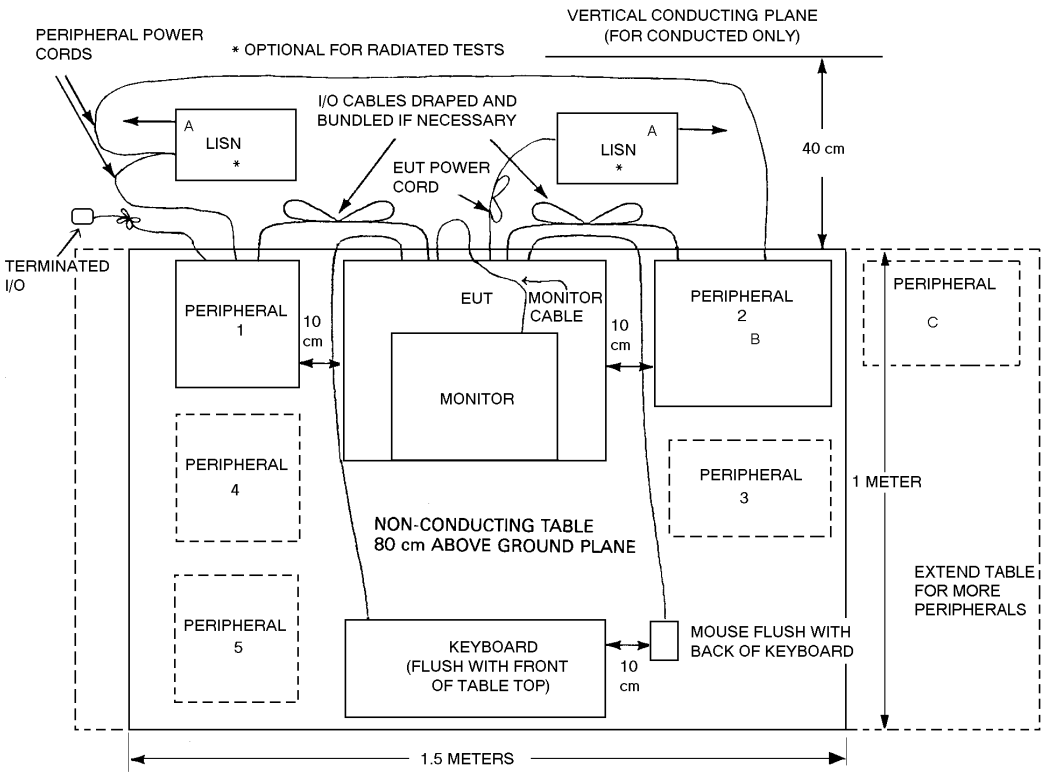

LEGEND:

A— LISN(s) may have to be positioned to the side of the table to meet the criterion that the LISN receptacle shall be 80 cm away from the EUT. LISN(s) may be above groundplane only for conducted emission measurements.

B—Accessories, such as ac power adapter, if typically table-mounted, shall occupy peripheral positions as is applicable. Accessories, which are typically floor-mounted, shall occupy a floor position directly below the power cord of the EUT (see 6.2.1.2).

C—Table length may be extended beyond 1.5 m with all peripherals aligned with the back edge. Otherwise, the additional peripherals may be placed as shown and the table depth extended beyond 1 m. The 40 cm distance to the vertical conducting plane shall be maintained for conducted testing. See 6.1.2.1 and 5.2.2.

Figure 13—Test configuration/arrangement for tabletop equipment (radiated and conducted emissions) — top view

 Copyright © 2001 IEEE. All rights reserved.

6.2.2 Floor-standing equipment tests

Where a floor-standing EUT is typically installed with its base in direct electrical contact with, or connected to, a grounded metal floor or grid, the EUT shall be connected to, or placed directly on, the test site (or turntable) reference groundplane in a manner representative of this contact or connection.

Where a floor-standing equipment is not typically installed with its base in direct electrical contact with, or connected to, a metal floor or grid, the EUT shall not be placed in direct electrical contact with the test site (or turntable) reference groundplane. If necessary to prevent direct metallic contact of the EUT and the reference groundplane, insulating material (up to 12 mm thick) shall be placed under the EUT.

In order to more explicitly represent typical raised/false floor installation of EUTs, the base of the EUT elevation may be raised, but in no case exceed 34 cm above the reference groundplane. If an EUT elevation, which is not representative of a typical installation, is used for testing, the reason for the variation shall be explained in the test report. In case of dispute, measurements made with the EUT at a representative elevation shall take precedence.

Floor-standing equipment (i.e., equipment defined in 3.1) can be interconnected with cabling lying on the floor, under the floor (to simulate a raised floor installation), or overhead, according to normal installation. The material used to raise the test item shall be nonconductive and shall not adversely affect the site validation criteria.

6.2.2.1 Placement of floor-standing EUTs

Test arrangements for floor-standing equipment are shown in Figure 10b, Figure 11b, Figure 12a, and Figure 12b. Normally, tests shall be run with the equipment standing on the reference groundplane, with or without an insulating surface, as appropriate.

6.2.2.2 Placement of floor-sanding accessories

Accessories that are part of a floor-standing system shall be placed in one typical arrangement with typical spacing between equipment cabinets or enclosures. If more than two accessories are present, a typical arrangement should be chosen that maintains typical spacing between all equipment cabinets or enclosures.

6.2.2.3 Placement and manipulation of interconnect cabling (or wiring) of floor-standing equipment

Interconnecting cables are not normally manipulated for floor-standing equipment in which the typical installation is known. Instead, the cables shall be laid out as shown in Figure 10b and Figure 11b. If the configuration of a typical installation is not known or changes with each installation, cables of floor-standing equipment shall be manipulated to the extent possible to produce the maximum level of emissions, within the range of typical installations.

6.2.3 Combination equipment tests

Equipment designed for both tabletop and floor operation shall be tested only in the tabletop arrangement. Equipment designed for floor operation shall be tested on the floor.

Equipment that is part of a combination of both tabletop and floor-standing equipment, which are typically used together, shall be tested as a combination in accordance with Figure 14.

Copyright © 2001 IEEE. All rights reserved.

6.2.3.1 Placement of combination equipment EUTs

Tabletop or floor-standing EUTs shall be positioned following 6.2.1.1 or 6.2.3.1, respectively, unless this produces an atypical arrangement. In such cases, position the EUT in a typical arrangement for testing and document the reason and differences in the test report.

6.2.3.2 Placement of combination equipment accessories

Tabletop or floor-standing accessories shall be positioned following 6.2.1.2 or 6.2.3.2, respectively, unless this produces an atypical arrangement. In such cases, position the accessory or accessories in a typical arrangement for testing and document the reason and differences in the test report.

6.2.3.3 Placement and manipulation of interconnect cabling (or wiring) of combination equipment

Follow Figure 10a, Figure 10b, Figure 11a, Figure 11b, Figure 14, and 6.2.1.3 for placement and manipulation of cabling or wiring connecting two tabletop units or a tabletop unit and a floor-standing unit. Follow 6.2.2.3 for placement and manipulation of cabling connecting two floor-standing units.

6.2.4 Placement of wall-mounted equipment

Equipment designed for wall-mounted operation shall be tested as tabletop EUT. The orientation of the equipment shall be consistent with that of normal operation.

7. AC powerline conducted emission measurements

AC powerline conducted emission measurements shall be made, unless otherwise specified, over the frequency range from 150 kHz to 30 MHz to determine the line-to-ground radio-noise voltage that is conducted from all of the EUT current-carrying power input terminals that are directly (or indirectly via separate transformers or power supplies) connected to a public power network. These measurements may also be required between 9 kHz and 150 kHz. In the United States, the FCC powerline conducted emission requirements for unintentional radiators cover the frequency range of 450 kHz to 30 MHz.

If the EUT normally receives power from another device that in turn connects to the public utility ac powerlines, measurements shall be made on that device with the EUT in operation to ensure that the device continues to comply with the appropriate limits while providing the EUT with power. If the EUT is operated only from internal or dedicated batteries, with no provisions for connection to the public utility ac powerlines (600 VAC or less) to operate the EUT (such as an adapter), ac powerline conducted measurements are not required.

7.1 Measurement requirements

Measured levels of ac powerline conducted emission shall be the radio-noise voltage from the line probe or across the 50 Ω LISN port (to which the EUT is connected), where permitted, terminated into a 50 Ω noise meter, or where permitted or required, the radio-noise current on the powerline sensed by a current probe. All radio-noise voltage and current measurements shall be made on each current-carrying conductor at the plug end of the EUT power cord or calibrated extension cord by the use of mating plugs and receptacles on the EUT and LISN if used. Equipment shall be tested with power cords that are normally supplied or recommended by the manufacturer, and that have electrical and shielding characteristics that are the same as those cords normally supplied or recommended by the manufacturer. For those measurements, using an LISN, the 50 Ω measuring port is terminated by a 50 Ω radio-noise meter or a 50 Ω resistive load. All other

 Copyright © 2001 IEEE. All rights reserved.

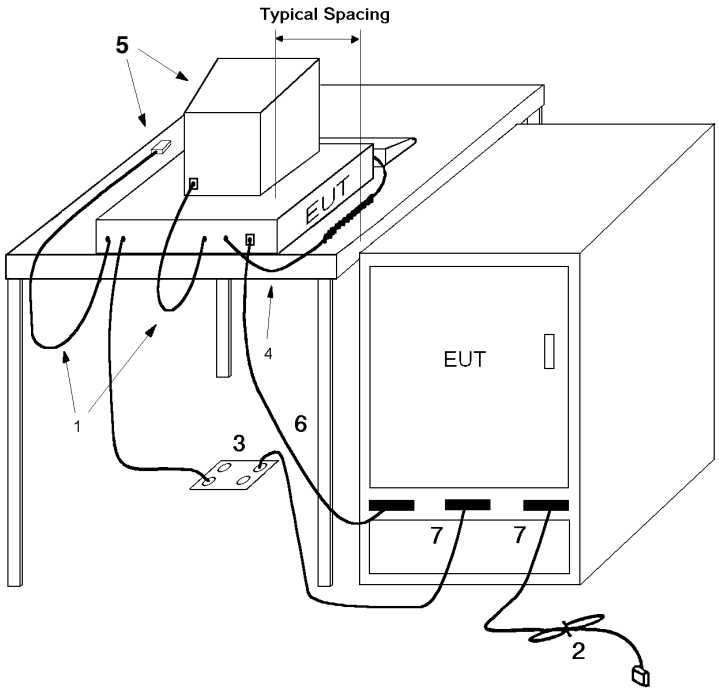

LEGEND:

1) Interconnecting cables that hang closer than 40 cm to the groundplane shall be folded back and forth in the center, forming a bundle 30 to 40 cm long.

2) I/O cables that are not connected to a peripheral shall be bundled in the center. The end of the cable may be terminated if required using the correct terminating impedance.

3) If LISNs are kept in the test setup for radiated emissions, it is preferred that they be installed under the groundplane with the receptacle flush with the groundplane (see 6.1.4).

4) Cables of hand-operated devices, such as keyboards, mice, etc., have to be placed as for normal use (see 6.2.1.3 and 11.2.4).

5) Non-EUT components of EUT system being tested (see also Figure 13).

6) I/O cable to floor-standing unit drapes to the groundplane and shortened or excess bundled. Cables not reaching the metal groundplane are draped to the height of the connector or 40 cm, whichever is lower.

7) Power cords and signal cables shall drape to the floor. No extension cords shall be used to the power receptacles.

8) The floor-standing unit can be placed under the table if its height permits.

Figure 14—Test configuration/arrangement for combination floor-standing and tabletop equipment (cables at below floor level)

Copyright © 2001 IEEE. All rights reserved.

ports are terminated in 50 Ω. Figure 10a, Figure 10b, Figure 13, and Figure 14 show typical test setups for ac powerline conducted emissions testing.

7.2 Measurement procedures

7.2.1 Measurements at a test site

Tabletop devices shall be placed on a platform of nominal size, 1 m by 1.5 m, raised 80 cm above the reference groundplane. The vertical conducting plane (see 5.2.2) or wall of a screened room shall be located 40 cm to the rear of the EUT. Floor-standing devices shall be placed either directly on the reference groundplane or on insulating material as described in 6.2.2.1. All other surfaces of tabletop or floor-standing EUTs shall be at least 80 cm from any other grounded conducting surface, including the case or cases of one or more LISNs. AC powerline adapters that are used with EUTs such as laptop or notebook computers should be placed as typically used, i.e., on the tabletop if the adapter-to-EUT cord is too short to allow the power adapter to reach the floor.

Each current-carrying conductor of the EUT power cord(s), except the ground (safety) conductor(s), shall be individually connected through an LISN to the input power source. All 50 Ω ports of the LISN shall be resistively terminated in 50 Ω when not connected to the measuring instrument. When the test configuration is comprised of multiple units (EUT and associated/peripheral equipment, or EUT consisting of multiple equipment) that have their own power cords, ac powerline conducted emissions measurements shall be performed with the ac powerline cord of the particular unit under test connected to one LISN that is connected to the measuring instrument. Those power cords for the units in the remainder of the configuration not under measurement shall be connected to an LISN different from the LISN used for the power cord of the portion of the EUT being measured. This connection may be made using a multiple receptacle device. Typical ac powerline conducted emissions test setups are shown in Figure 10a, Figure 10b, and Figure 13. Emissions from each current-carrying conductor of the EUT shall be individually measured. Where multiple portions of the EUT receive ac power from a common power strip, which is furnished by the manufacturer as part of the EUT, measurements need only be made on the current-carrying conductors of the common power strip. Adapters or extension cords connected between the EUT power cord plug and the LISN power receptacle shall be included in the LISN setup such that the calibration of the combined adapter or extension cord with an adapter and the LISN meets the requirements of 5.2.3.1.

If the EUT is comprised of a number of devices that have their own separate ac power connections, e.g., a floor-standing frame with independent power cords for each shelf, that are able to connect directly to the ac power network, each current-carrying conductor of one device is measured while the other devices are connected to a second (or more) LISN(s). All devices shall be separately measured. If a power strip is provided by the manufacturer, to supply all of the devices making up the EUT, only the conductors in the common power cord to the power strip shall be measured.

If the EUT is normally operated with a ground (safety) connection, the EUT shall be connected to the ground at the LISN through a conductor provided in the lead from the ac power to the LISN.

The excess length of the power cord between the EUT and the LISN receptacle (or ac power receptacle where an LISN cannot be used), or an adapter or extension cord connected to and measured with the LISN, shall be folded back and forth at the center of the lead to form a bundle not exceeding 40 cm in length. If the EUT does not have a flexible power lead, the EUT shall be placed at a distance of 80 cm from the LISN (or power receptacle where an LISN cannot be used) and connected thereto by a power lead or appropriate connection no more than 1 m long. The measurement shall be made at the LISN end of this power lead or connection.

The LISN housing, measuring instrument case, reference groundplane, vertical conducting plane, if used (see 5.2.2), shall be bonded together.

 Copyright © 2001 IEEE. All rights reserved.

7.2.2 On-site ac powerline conducted emission measurements

If measurements are performed at user's installations, the EUT shall be installed as normally used (see 5.6).

7.2.3 Exploratory ac powerline conducted emission measurements

Exploratory measurements shall be used to identify the frequency of the emission that has the highest amplitude relative to the limit by operating the EUT in a range of typical modes of operation, cable positions, and with a typical system equipment configuration and arrangement. For each mode of operation and for each ac power current-carrying conductor, cable manipulation may be performed within the range of likely configurations. For this measurement or series of measurements, the frequency spectrum of interest shall be monitored looking for the emission that has the highest amplitude relative to the limit. Once that emission is found for each current-carrying conductor of each power cord associated with the EUT (but not the cords associated with non-EUT equipment in the overall system), the one configuration and arrangement and mode of operation that produces the emission closest to the limit over all of the measured conductors is recorded.

7.2.4 Final ac powerline conducted emission measurements

Based on the exploratory tests of the EUT, the one EUT cable configuration and arrangement and mode of operation that produced the emission with the highest amplitude relative to the limit is selected for the final measurement. If the EUT is relocated from an exploratory test site to a final test site, the highest emissions shall be remaximized at the final test location before final ac powerline conducted emission measurements are performed. The final test on all current-carrying conductors of all of the power cords to the equipment that comprises the EUT (but not the cords associated with other non-EUT equipment in the system) is then performed for the full frequency range for which the EUT is being tested for compliance without further variation of the EUT arrangement, cable positions, or EUT mode of operation. If the EUT is comprised of equipment units that have their own separate ac power connections, e.g., a floor-standing frame with independent power cords for each shelf that are able to connect directly to the ac power network, each current-carrying conductor of one unit is measured while the other units are connected to a second (or more) LISN(s). All units shall be separately measured. If a power strip is provided by the manufacturer, to supply all of the units making up the EUT, only the conductors in the power cord of the power strip shall be measured. Data shall be collected that satisfy the report requirements in Clause 10.

8. Radiated emission measurements

Radiated emissions measurements shall be made over the frequency range specified by the procuring authority or regulatory agency or in a specific referenced document, but not outside of the frequency range of 9 kHz to 40 GHz.

8.1 Measurement requirements

Measurements shall be made at the EUT azimuth and antenna height such that the maximum radiated emissions level shall be detected. Ordinarily, this requires the use of a turntable as described in 5.4.4 and an antenna positioner, as described in 5.4.5.

Where a continuous azimuth search cannot be made, frequency scans of the EUT field strength with both polarities of the measuring antenna shall be made at a minimum of 16 azimuth angles around the EUT, nominally spaced by 22.5°, in characterizing the EUT radio-noise profile. If directional radiation patterns are suspected, additional azimuth angles shall be examined.

Copyright © 2001 IEEE. All rights reserved.

Figures 11a through Figure 14 show typical test setups for tabletop, floor-standing, or combinations of tabletop and floor-standing EUTs. The LISNs, installed for the ac powerline conducted emission measurement, may be left in the arrangement for the radiated radio-noise measurements, but unused terminals shall be terminated in 50 Ω. If LISNs are used as part of the test setup when making radiated emissions measurements, the receptacle for the EUT power connection to the LISN shall be bonded to the OATS reference groundplane; it is preferred that the LISNs be located beneath and the receptacles flush with the reference groundplane (exceptions are shown in Figure 10a, Figure 10b, and Figure 12a).

Burn-out and saturation protection for the measuring instrumentation is required when low-level emissions are to be measured in the presence of a high-level signal. A combination of bandpass, bandstop, low-pass, and high-pass filters may be used. However, the insertion loss of these or any other devices at the frequencies of measurement shall be known and included in any calculations in the report of measurements. NSA performance must still be met if LISNs are placed above the reference plane on the radiated emissions test site.

8.2 Antenna selection, location, and measuring distance

8.2.1 Magnetic field radiated emissions

In the frequency range of 9 kHz to 30 MHz, magnetic field measurements may be performed. This method is applicable for radiated radio noise from all units, cables, power cords, and interconnect cabling or wiring. A calibrated loop antenna as specified in 4.1.5.1 shall be positioned with its plane vertical at the specified distance from the EUT and rotated about its vertical axis for maximum response at each azimuth about the EUT. For certain applications, the loop antenna may also need to be positioned horizontally at the specified distance from the EUT. The center of the loop shall be 1 m above the ground.

8.2.2 Electric field radiated emissions below 30 MHz

Electric field measurements may be made in the frequency range of 9 kHz to 30 MHz. This method is applicable for radiated radio noise from all units, cables, powerlines, and interconnecting wiring. A calibrated monopole (rod) antenna as specified in 4.1.5.2 shall be positioned at the specified distance from the EUT. The base of the monopole assembly should be placed on the reference groundplane with the antenna rod element vertical. If the antenna is supplied with a counterpoise, the counterpoise shall be bonded to the reference groundplane through a low-impedance connection.

NOTE—Some regulatory and purchasing agencies do not permit the use of the rod antenna for radiated emission measurements below 30 MHz.

8.2.3 Electric field radiated emissions (30 MHz to 1 GHz)

Electric field measurements may be made in the frequency range of 30 MHz to 1000 MHz. A calibrated, linearly polarized antenna as specified in 4.1.5.3 shall be positioned at the specified distance from the periphery of the EUT. The specified distance is the distance between the horizontal projection onto the groundplane of the closest periphery of the EUT and the projection onto the groundplane of the center of the axis of the elements of the receiving antenna. However, if the receiving antenna is a log-periodic array, the specified distance shall be the distance between the closest periphery of the EUT and the front-to-back center of the array of elements.

Measurements shall be made with the antenna positioned in both the horizontal and vertical planes of polarization. The measurement antenna shall be varied in height above the reference groundplane to obtain the maximum signal strength. Unless otherwise specified, the measurement distance shall be 3 m, 10 m, or 30 m. At any measurement distance, the antenna height shall be varied from 1 m to 4 m.

 Copyright © 2001 IEEE. All rights reserved.

These height scans apply for both horizontal and vertical polarizations, except that for vertical polarization, the minimum height of the center of the antenna shall be increased so that the lowest point of the bottom of the lowest antenna element clears the site reference groundplane by at least 25 cm. For a tuned dipole, the minimum heights as measured from the center of the antenna are shown in Table 3.

NOTE—Heirman [B17] indicates significant differences in the vertically polarized data measured between broadband and tuned dipole antennas at minimum heights. broadband antennas may yield higher values.

8.2.4 Electric field radiated emissions (1 GHz to 40 GHz)

Radiated emission measurements above 1 GHz are made using calibrated linearly polarized antennas as specified in 4.1.5.4, which may have a smaller beamwidth (main lobe) than do the antennas used for frequencies below 1 GHz. Because some EUTs may have a size larger than the beamwidth of the antenna at the specified measurement distance, and because the source of emissions is generally limited to relatively small-angle cones of radiation, the antenna beamwidth shall be known so that when emissions from large EUTs are measured, the area of coverage of the EUT can be determined. Moving the measurement antenna over the surfaces of the four sides of the EUT or another method of scanning of the EUT is required when the EUT is larger than the beamwidth of the measuring antenna. When radiated measurements are made at the measurement distance and the measurement antenna does not completely encompass a large EUT at that distance, additional measurements at a greater distance may be necessary to demonstrate that emissions were at maximum at the limit distance.

For any EUT, the frequencies of emission should first be detected. Then the amplitudes of the emissions are measured at the specified measurement distance using the required antenna height, polarization, and detector characteristics.

It is preferred that measurements be performed on an OATS or in an absorber-lined room. However, measurements may also be performed where there is adequate clearance, considering the radiation pattern of the EUT, to ensure that any reflections from any other objects in the vicinity do not affect the measurements. Because the receiving antenna is unlikely to sense simultaneously both a direct signal and a signal reflected from the reference groundplane, a reference groundplane is not required.

In performing these measurements, the sensitivity of the complete measurement system relative to the limit shall be determined before the test. If the overall measurement sensitivity is inadequate, low-noise preamplifiers, closer measurement distances, higher gain antennas, or narrower bandwidths may be used. If closer measurement distances or higher gain antennas are used, the beamwidth versus size of the EUT shall be taken into account. Also, measurement system overload levels shall be determined to be adequate when preamplifiers are used. The effects of using bandwidths different from those specified shall also be determined. Any changes from the specific measurement conditions shall be described in the report of the measurements. (See also 10.1.4 and 10.1.9.)

8.3 Radiated emission measurement procedures

8.3.1 Measurements on a test site

8.3.1.1 Exploratory radiated emission measurements

Exploratory radiated measurements shall be performed at the measurement distance or at a closer distance than that specified for compliance to determine the emission characteristics of the EUT. At near distances, for EUTs of comparably small size, it is relatively easy to determine the spectrum signature of the EUT and, if applicable, the EUT configuration that produces the maximum level of emissions. A shielded room may be used for exploratory testing, but may have anomalies that can lead to significant errors in amplitude measurements.

Copyright © 2001 IEEE. All rights reserved.

Broadband antennas and a spectrum analyzer or a radio-noise meter with a panoramic display are often useful in this type of testing. It is recommended that either a headset or loudspeaker be connected as an aid in detecting ambient signals and finding frequencies of significant emission from the EUT when the exploratory and final testing is performed in an OATS with strong ambient signals. Caution should be taken if either antenna height or EUT azimuth is not fully explored. Not fully exploring these parameters during exploratory testing may require complete testing at the OATS or semi-anechoic chamber when the final full spectrum testing is conducted.

The EUT should be set up in its typical configuration and arrangement, and operated in its various modes. For tabletop systems, cables or wires should be manipulated within the range of likely arrangements. For floor-standing equipment, the cables or wires should be located in the same manner as the user would install them and no further manipulation is made. For combination EUTs, the tabletop and floor-standing portions of the EUT shall follow the procedures for their respective setups and cable manipulation. If the manner of cable installation is not known, or if it changes with each installation, cables or wires for floor-standing equipment shall be manipulated to the extent possible to produce the maximum level of emissions.

For each mode of operation required to be tested, the frequency spectrum shall be monitored. Variations in antenna height between 1 and 4 m, antenna polarization, EUT azimuth, and cable or wire placement (each variable within bounds specified elsewhere) shall be explored to produce the emission that has the highest amplitude relative to the limit. A step-by-step technique for determining this emission can be found in Annex D.

When measuring emissions above 1 GHz, the frequencies of maximum emission shall be determined by manually positioning the antenna close to the EUT and by moving the antenna over all sides of the EUT while observing a spectral display. It will be advantageous to have prior knowledge of the frequencies of emissions above 1 GHz. If the EUT is a device with dimensions approximately equal to that of the measurement antenna beamwidth, the measurement antenna shall be aligned with the EUT.

8.3.1.2 Final radiated emission measurements

Based on the measurement results in 8.3.1.1, the one EUT, cable and wire arrangement, and mode of operation that produces the emission that has the highest amplitude relative to the limit is selected for the final measurement. The final measurement is then performed on a site meeting the requirements of 5.3, 5.4, or 5.5 as appropriate without variation of the EUT arrangement or EUT mode of operation. If the EUT is relocated from an exploratory test site to a final test site, the highest emission shall be remaximized at the final test location before final radiated emissions measurements are performed. However, antenna height and polarity and EUT azimuth are to be varied. In addition, the full frequency spectrum (for the range to be checked for meeting compliance) shall be investigated.

This investigation is performed with the EUT rotated 360°, the antenna height scanned between 1 m and 4 m, and the antenna rotated to repeat the measurements for both the horizontal and vertical antenna polarizations. During the full frequency spectrum investigation, particular focus should be made on those frequencies found in exploratory testing that were used to find the final test configuration, mode of operation, and arrangement (associated with achieving the least margin with respect to the limit). This full spectrum test constitutes the compliance measurement.

For measurements above 1 GHz, use the cable, EUT arrangement, and mode of operation determined in the exploratory testing to produce the emission that has the highest amplitude relative to the limit. Place the measurement antenna away from each area of the EUT determined to be a source of emissions at the specified measurement distance, while keeping the antenna in the “cone of radiation” from that area and pointed at the area both in azimuth and elevation, with polarization oriented for maximum response. The antenna may have to be higher or lower than the EUT, depending on the EUT’s size and mounting height, but the antenna should be restricted to a range of heights of from 1 m to 4 m above the ground or reference groundplane. If the transmission line for the measurement antenna restricts its range of height and polarization, the steps needed to ensure the correct measurement of the maximum emissions, shall be described in detail in the report of measurements. Data collected shall satisfy the report requirements of Clause 10.

 Copyright © 2001 IEEE. All rights reserved.

NOTES

1— Where limits are specified by agencies for both average and peak (or quasi-peak) detection, if the peak (or quasi-peak) measured value complies with the average limit, it is unnecessary to perform an average measurement.

2—Use of waveguide and flexible waveguide may be necessary at frequencies above 10 GHz to achieve usable signal-to-noise ratios at required measurement distances. If so, it may be necessary to restrict the height search of the antenna, and special care should be taken to ensure that maximum emissions are correctly measured.

3—All presently known devices causing emissions above 10 GHz are physically small compared with the beamwidths of typical horn antennas used for EMC measurements. For such EUTs and frequencies, it may be preferable to vary the height and polarization of the EUT instead of the receiving antenna to maximize the measured emissions.

8.3.2 On-site measurements

When it is required to make radiated emission measurements on site at a user's installation, the instructions in the product standards or applicable regulations shall be followed. Unless otherwise specified in the individual equipment requirements, measurements shall be made in accordance with 8.1 to locate the radial of maximum emission at the limit distance from the nearest point of the equipment being tested with antenna search heights as normally required. Where measurements at the limit distance from the EUT are impractical, measurements may be made at greater or lesser distances as near to the limit distance as practical and extrapolated to the limit distance (see 10.1.8.2). A detailed description of the tests and any rationale for variations in measurement procedures, measurement distances, and so on, shall be included in the test report. An LISN shall not be used for testing at the user's installation, unless the LISN is a part of the normal installation, in order that the measured radio noise be representative of the specific site. In the tests, the height of the antenna and its polarization are to be varied in accordance with the requirements of this clause. For further guidance, see IEEE Std 139-1988.

9. Radio-noise power

Measurements of radio-noise power may be made in lieu of radio-noise radiated emissions measurements for certain restricted frequency ranges and for certain types of EUT. Such measurements use the calibrated absorbing clamp. Use of the clamp as an alternative to radiated emissions measurement shall be specified in the individual equipment requirements.

9.1 Absorbing clamp measurement procedures

The test arrangement for the measurement of radio-noise power is shown in Figure 15. The power cord connects the EUT with the commercial power source.

The EUT is placed on a nonmetallic table, or on the floor if it is a floor-standing unit, and is located at least 40 cm from any other metallic objects. The power cord is positioned to form a straight line so that the absorbing clamp can be moved along the power cord to determine the maximum radio noise. If radio-noise power is to be measured on a floor-standing unit, the power cord shall leave the EUT at an angle of less than 45° with respect to a reference groundplane, until it reaches a height 40 cm above the floor, and then continue horizontally.

The absorbing clamp is then moved along the power cord and shall be positioned to absorb maximum power, that is, give the highest indication on the receiver. Normally, the maximum that is nearer to the EUT is used.

The radio-noise meter reading in dB (mV) is directly translatable to dB (pW) for the optimum coupling. The coupling varies from the optimum with distance from the EUT (first or second maximum) and frequency. The meter reading shall be corrected in accordance with the calibration data for the particular clamp used (see 4.4.4).

Copyright © 2001 IEEE. All rights reserved.

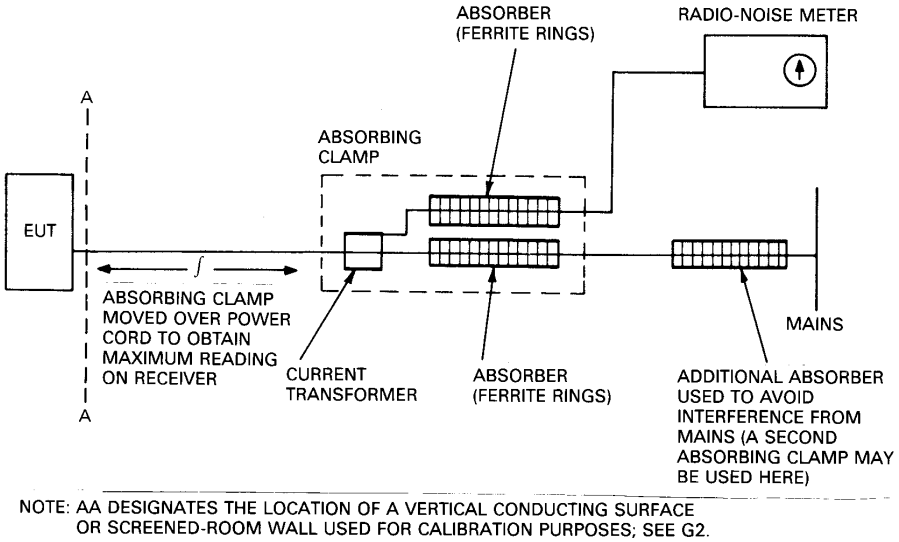

Figure 15—Equipment arrangement for radio-noise power measurement

10. Test reports

Test reports are the means of presenting the test results to the appropriate procuring or regulatory agency or for archiving the data in the permanent files of the testing organization. As such, test reports shall be clearly written, in unambiguous language. A practical guide to follow is contained in ISO/IEC Guide 25-1990. For tests performed using wideband TEM devices, the report requirements in M.5 augments those of this clause. Where there are conflicts, the M.5 requirements take precedence.

10.1 Test report content

The conditions, relating to the tests, listed in the following clauses shall be described in the test report in order for the test results to be properly documented.

10.1.1 Applicable standards

In addition to this standard, any other standards to which the EUT was tested shall be clearly described in the test report. Where referenced standards have more than one measurement procedure, or where the referenced measurement procedure has options, the test report shall state which procedures or options were used (see 1.2). The test report shall also state the issue or year of the referenced standard(s) used.

10.1.2 Equipment units tested

The test report shall list all equipment tested, including product type and marketing designations, where applicable. Serial numbers and any other distinguishing identification features shall also be included in the test report. Identification or a detailed description shall also be made of interconnecting cables.

The rationale for selecting the EUT, comprising the equipment units needed to be functionally complete, and the necessary cabling shall be noted in the test report.

 Copyright © 2001 IEEE. All rights reserved.

10.1.3 Equipment and cable arrangement

The setup of the equipment and cable or wire placement on the test site that produces the highest radiated and the highest ac powerline conducted emissions shall be clearly shown and described. Drawings or photographs may be used for this purpose (see 10.1.12). A block diagram showing the interconnection of the major functional units is also useful.

10.1.4 List of test equipment

A complete list of all test equipment used shall be included with the test report. Manufacturer's model and serial numbers, and date of last calibration and calibration interval, shall be included. Measurement cable loss, measuring instrument bandwidth and detector function, video bandwidth, if appropriate, and antenna factors shall also be included where applicable.

10.1.5 Units of measurement

Measurements of ac powerline conducted emissions, output, and spurious conducted emissions for TV interface devices, and antenna transfer switch isolation for TV interface devices shall be reported in units of decibels referenced to one microvolt [dB (μV)]. Measurements of transfer switch isolation for cable TV switches shall be reported in units of decibels below the input level. Measurements of radiated emissions shall be reported in units of decibels referenced to one microvolt per meter [dB (μV/m)] for electric fields or 1 A/m [dB (A/m)] for magnetic fields at the distance specified in the appropriate standards or requirements. Measurements of antenna-conducted power for receivers may be reported in units of decibels referenced to one microvolt [dB (μV)] if the impedance of the measuring instrument is also reported. Otherwise, report antenna-conducted power in units of decibels referenced to one milliwatt [dB (mW)]. Measurements of operating frequency, operating frequency with variations in ambient temperature and input voltage, and occupied bandwidth of intentional radiators shall be reported in units of hertz or multiples thereof [e.g., kilohertz (kHz), megahertz (MHz)]. Measurements of input power to intentional radiators shall be reported in units of watts. All formulas of conversions and conversion factors, if used, shall be included in the measurement report.

10.1.6 Location of test facility

The location of the test site shall be identified in the test report. Facilities that have received recognition or listing from various accreditation bodies shall use the same site address information as was included in their original application for recognition or listing.

10.1.7 Measurement procedures

The sequence of testing followed to determine the emissions included in the test report should be documented. For example, the sequence used during exploratory testing in accordance with 7.2.3 and 8.3.1.1 should be given in the test report, in sufficient detail to allow replication of the test results by procuring or regulatory agencies, or if required to perform further tests and ongoing compliance checks.

10.1.8 Reporting measurement data

The measurement results along with the appropriate limits for comparison shall be presented in tabular or graphical form. Alternatively, recorded charts, photographs of a spectrum analyzer display or printouts of receiver screen contents may be used if the information is clearly presented showing comparison to the limits and all data conversion is explained. The method of comparing spectrum analyzer output to the limits shall be included.

Copyright © 2001 IEEE. All rights reserved.

10.1.8.1 AC powerline conducted emissions data

The frequency and amplitude of the six highest ac powerline conducted emissions relative to the limit, and the operating frequency or frequency to which the EUT is tuned (if appropriate), shall be reported for each current-carrying conductor of the EUT powerline cord (each cord normally containing two or more current-carrying conductors depending on the power system used), unless such emissions are more than 20 dB below the limit. If less than six emissions are within 20 dB of the limit, the noise level of the measuring instrument at representative frequencies shall be reported. The specific conductor of the powerline cord for each of the reported emissions shall be identified.

NOTE—The six highest emissions are among the current-carrying conductors, not each current-carrying conductor.

10.1.8.2 Radiated emission data

For ITE unintentional radiators, the frequency and amplitude of the six highest radiated emissions relative to the limit and independent of antenna polarization shall be reported unless such emissions are more than 20 dB below the limit. If less than the specified number of six emissions are within 20 dB of the limit, the noise level of the measuring instrument at representative frequencies shall be reported.

For unintentional radiators other than ITE, for each of the frequencies to which the device is tuned, the frequency and amplitude of the six highest radiated emissions relative to the limit and the operating frequency, or frequency to which the EUT is tuned (if appropriate), shall be reported unless such emissions are more than 20 dB below the limit. If less than the specified number of six emissions are within 20 dB of the limit, the noise level of the measuring instrument at representative frequencies shall be reported.

For intentional radiators, for each of the frequencies to which the device is tuned, the frequency and amplitude of the highest fundamental emission, the frequency and amplitude of the three highest harmonic or spurious emissions relative to the limit, and the frequency and amplitude of the three highest restricted band emissions relative to the limit shall be reported.

The polarization of the measurement antenna (horizontal or vertical) shall be identified for each of the reported emissions. Radiated emissions measurements taken at alternative distances are to be converted to the limit distance using the inverse distance relationship, unless data can be presented to validate a different conversion. At a reported frequency, the polarization with the highest level shall be reported.

10.1.8.3 Antenna-conducted power data for receivers

For each of the frequencies to which the receiver is tuned, if antenna-conducted power measurements are performed, the frequency to which the receiver is tuned, the frequency and level of the six highest emissions relative to the limit, and the impedance of the measuring instrument shall be reported unless such emissions are more than 10 dB below the limit. If less than six emissions are within 10 dB of the limit, the noise level of the measuring instrument at representative frequencies shall be reported.

10.1.8.4 Output and spurious conducted data for TV interface devices

For each channel provided in the EUT, the output channel and the peak RF levels shall be reported as follows: the visual carrier, the aural carrier, the three highest spurious emissions relative to the limit observed in the range from 30 MHz to 4.6 MHz below the visual carrier frequency, and the three highest spurious emissions relative to the limit observed from 7.4 MHz above the visual carrier frequency to 1 GHz. If the spurious emissions observed are more than 20 dB below the limit, the noise level of the measuring instrument at representative frequencies shall be reported. The operating mode of the EUT and modulation for each data point shall also be listed.

 Copyright © 2001 IEEE. All rights reserved.

10.1.8.5 Antenna transfer switch data

For cable TV antenna transfer switches either internal or external to a device, the minimum isolation level above and below 216 MHz for each pair of antenna input ports or terminals shall be reported. For antenna transfer switches associated with TV interface devices, the peak RF level of the visual carrier measured at each antenna input port or terminal for every output channel provided in the EUT shall be reported. For both types of switches, the input port, modulating signal, device powered on or off, and switch position for each data point shall also be listed.

10.1.8.6 Operating frequency data for intentional radiators

On each operating frequency measured, if required on an intentional radiator, the frequency and the time after startup of each measurement shall be reported. The ambient temperature at which these measurements were made shall also be reported.

10.1.8.7 Frequency stability data for intentional radiators

For frequency stability versus ambient temperature measurements, if required on an intentional radiator, the chamber temperature, the operating frequency, the frequency deviation in percent from nominal-rated channel frequency, and the time after startup of each measurement shall be reported for the number of operating frequencies required to be measured. For frequency stability versus input voltage, the ac or dc voltage supplied to the EUT, the operating frequency, the frequency deviation in percent from nominal-rated channel frequency, and the chamber temperature shall be reported for each of the operating frequencies measured.

10.1.8.8 Occupied bandwidth data for intentional radiators

On each operating frequency measured, if occupied bandwidth measurements are required on an intentional radiator, the occupied bandwidth shall be reported. This may be accomplished by providing tabular data, photographs, or plots of the measuring instrument display. If photographs or plots of instrument display are submitted as data, the axes, the scale units per division, and the limit shall be clearly labeled.

10.1.8.9 Input power data for intentional radiators

On each operating frequency measured, if input power measurements are required on an intentional radiator, the input power to the device shall be reported.

10.1.9 General and special conditions

For EUTs that cannot be arranged in full conformance with the test setups in Figure 10a through Figure 14, a full description of the alternative arrangement used shall be included in the test report. If an alternative test method was used, the test report shall identify and describe that method, provide justification for its use, and describe how the results obtained through its use correlate with, or are equivalent to, the methods specified by the standard to which the EUT was tested. Instrumentation, instrument attenuator and bandwidth settings, detector function, EUT arrangement, and all other pertinent details of the test method shall be provided so that the alternative test method could be replicated. Where automatic scan techniques were used, an explanation of how the highest emission relative to the limit from the EUT was determined and the scan rate used (see 4.1.1.1) to obtain recorded emissions is to be included in the test report. The actual operating conditions (e.g., voltage and powerline frequency) shall be listed in the report. The actual environmental conditions (e.g., temperature and relative humidity) shall be listed in the report if critical to the test results.

Copyright © 2001 IEEE. All rights reserved.

10.1.10 Summary of results

The test report summary section shall indicate whether the EUT passes or fails, and give margins with respect to the limits to which it was tested. If the equipment only passes with specific modifications or special attributes (such as shielded cables), this information shall be included in the summary results.

10.1.11 Required signatures

The test report shall contain the signature of the representative of the organization performing the tests. In addition, the test report shall contain the identification of the staff who were responsible for the proper execution of the test, and the name and address of the party requesting the tests.

10.1.12 Test report appendixes

The test report shall contain, if required, photographs or detailed sketches of the EUT configuration and arrangement showing sufficient information to allow the EUT to be reconfigured and arranged in a manner that would allow the original test to be replicated with a high likelihood that the test results would be in agreement with the results of the original test within acceptable tolerances.

10.1.13 Statements required for engineering changes to the EUT

If any modifications are made to the EUT to bring the EUT into compliance with the appropriate specifications, the test report shall give a complete description of, and reasons for, these modifications. A written statement shall be included with the report, signed by the requester of the tests, that the product will have all of the modifications incorporated into the product when manufactured and placed on the market. The report is not complete without these two signed statements.

10.2 Test report disposition

The manufacturer or test facility may be required by an accreditation authority or regulatory agency to maintain a copy of the report for a specific period of time.

11. Measurement of information technology equipment (ITE)

This clause contains information applying specifically to ITE. In general, testing is performed as specified in Clause 6, Clause 7, and Clause 8. with the additions, specific clarifications, and exceptions described in this clause.

This clause prescribes many procedures designed to enhance repeatability. Deviations from the prescribed procedure are permitted only where justified by typical usage and may require approval of the appropriate authority. Any deviations from the prescribed procedure shall be described and fully justified as outlined in 1.2 and 10.1.9.

Depending on the internally generated frequency of the ITE (digital device), measurements may be specified on the average quasi-peak, or peak basis, or a combination of these detector functions. Because of the complexity of the individual equipment requirements, careful study of these requirements is recommended before proceeding with testing.

 Copyright © 2001 IEEE. All rights reserved.

11.1 Operating conditions

As pointed out in 6.1, all parts of the system shall be exercised. For example, in a computer system, tape and disk drives shall be put through a read-write-erase sequence, various portions of memories shall be addressed, any mechanical activities shall be performed, and video units shall display a variety of characters.

11.1.1 Hosts

The host, typically a CPU, should be tested as part of a system. If the host is a personal computer, it shall be tested with peripherals comprising the system as described in 11.2. Interface cables shall be connected to one of each type of functional interface port on the host, and each cable should be terminated in a peripheral load typical of actual usage.

11.1.2 Peripherals/accessories

Any peripheral/accessory being tested separately shall be driven by the appropriate host equipment. The host for a personal computer peripheral shall be the personal computer typical of actual usage. If the host is a personal computer, the host and peripheral/accessory under test shall be tested with any additional equipment needed to satisfy the minimum system requirements of 11.2. In case the peripheral is not the EUT, for instance, a printer, it is not necessary that the printer constantly print scrolling H's, but rather there shall be some indication that the printer is being communicated with; for instance, a continuous carriage movement is adequate.

11.1.3 Visual display units

If the EUT system includes a visual display unit or monitor, the following operational conditions apply:

a) Set the contrast control to maximum.

b) Set the brightness control to maximum or at raster extinction if raster extinction occurs at less than maximum brightness.

c) For color monitors, use white letters on a black background to represent all colors.

d) Select the worse case of positive or negative video if both alternatives are available.

e) Set character size and number of characters per line so that the typical maximum number of characters per screen is displayed.

f) For a monitor that has no graphics capabilities, regardless of the video card used, a pattern consisting of random text shall be displayed. For a monitor with graphics capability, even though another video card may be needed to accomplish a graphic display, a screen pattern consisting of lines of scrolling H's should be displayed. For a monitor that has no text capabilities, use a typical display. That pattern should be used for the remainder of the tests.

11.2 Tabletop systems

Follow 6.2.1 for placement of the EUT, placement of the peripheral/accessory, and placement and manipulation of interface cables for testing tabletop ITE systems.

For a personal computer, or a peripheral/accessory intended to be used with a personal computer, the minimum system consists of the following devices grouped and tested together:

a) Personal computer

b) Keyboard

c) VDU (monitor)

Copyright © 2001 IEEE. All rights reserved.

d) A peripheral external to the host for each of two different types of available I/O protocols, e.g., serial, parallel, and so on

e) If the EUT has a dedicated port for a special-purpose device, e.g., a mouse, joystick, or external disk drive, that device shall be part of the minimum system

NOTE—Items a), b), or c) may, in some systems, be assembled in the same chassis. In no instance may items a), b), or c) or joystick controls satisfy the requirements of item d).

For host PCs upon which the monitor cannot be mounted (i.e., laptop/notebook or tabletop-mounted tower PCs), the monitor shall occupy an adjacent position to the left or right of the host as appropriate for the specific EUT.

Figure 10a, Figure 11a, and Figure 13 show the recommended equipment and cable arrangement that are described in 6.2.1 and 11.2 through 11.2.4.

11.2.1 Placement of host

For tabletop hosts, the host shall be centered laterally on the tabletop and its rear shall be flush with the rear of the table, unless that would not be typical of normal usage (e.g., a minitower computer that would normally be placed to the side of the VDU).

11.2.2 Placement of monitors and keyboards

The monitor should be placed on top of the host, centered and flush with the front of the host, unless the host is not designed for such usage. In that case, the monitor shall occupy an adjacent position to the left or right of the host, maintaining a 10 cm separation from adjacent equipment. The keyboard shall be positioned in front of the monitor, centered on the monitor, and flush with the front edge of the tabletop surface (See Figure 10a, Figure 11a, and Figure 13).

11.2.3 Placement of external peripherals/accessories

External peripherals (external to the host) that are part of a tabletop system shall normally be placed in a single arrangement with one peripheral on each side of the host with a 10 cm separation between closest points of the cabinets if at least two peripherals are present. If more than two external peripherals are present, a typical arrangement should be chosen that maintains a 10 cm spacing between all equipment cabinets. If less than two peripherals are present, position the peripheral as in 6.2.1.2. Peripherals that are designed to be stacked (one on top of another) shall be stacked in a typical manner as long as there is at least one peripheral on each side of the host. A mouse or joystick shall be positioned 10 cm to the right of the keyboard (see Figure 13).

11.2.4 Placement and manipulation of interface cables

Excess interface cable length shall be draped over the back edge of the tabletop for tabletop equipment. If any draped cable extends closer than 40 cm to the reference groundplane, the excess shall be bundled in the center in a serpentine fashion using 30 to 40 cm lengths to maintain the 40 cm height. If the cables cannot be bundled because of bulk, length, or stiffness, they shall be draped over the back edge of the tabletop unbundled, but in such a way that all portions of the interface cable remain at least 40 cm from the horizontal reference groundplane, as shown in Figure 10a and Figure 11a.

The system shall be configured and setup in one typical equipment arrangement for the test. In making any tests involving several pieces of tabletop equipment interconnected by interface cables, it is essential to recognize that the measured levels may be critically dependent on the exact placement of the interface cables. Thus, exploratory tests as specified in 7.2.3 and 8.3.1.1 should be carried out while varying cable positions to determine the maximum or near-maximum emission level. During manipulation, cables shall

 Copyright © 2001 IEEE. All rights reserved.

not be placed under or on top of the system test components unless such placement is required by the inherent equipment design.

If the monitor can be powered through an receptacle on the host unit, it shall be tested in two ways, i.e., powered through the host, and powered separately as required during both exploratory ac powerline conducted and exploratory radiated emissions testing.

11.3 Floor-standing equipment arrangement

Follow 6.2.2.1 for placement of the EUT, placement of peripherals, and placement and manipulation of interface cables for testing a floor-standing ITE system.

11.4 Combination tabletop and floor-standing equipment arrangement

Follow 6.2.3 for placement of the EUT, placement of peripherals, and placement and manipulation of interface cables for testing a combination tabletop and floor-standing ITE system.

11.5 AC powerline conducted emission measurements

The following paragraphs describe the procedures that should be used for performing the final ac powerline conducted emission measurements of ITE. Additional guidance and step-by-step procedures for preparing the setups and carrying out the required ac powerline conducted and radiated emission measurements for personal computers and associated peripherals are given in Annex E.

11.5.1 Exploratory ac powerline conducted emission measurements

Using the procedure in 7.2.3, determine the mode of operation and cable positions of the EUT system that produce the emission with the highest amplitude relative to the limit. This arrangement shall be used in final ac powerline conducted emission testing of the EUT.

11.5.2 Final ac powerline conducted emission measurements

Using the mode of operation and arrangement of the EUT determined in 11.5.1, follow the procedure in 7.2.4 to perform final ac powerline conducted emission measurements. Measure and record the six highest emissions relative to the limit on each of the power cords, measuring all of the current-carrying conductors of each of the power cords of the equipment that comprises the EUT over the frequency range specified by the procuring or regulatory agency. See 10.1.8.1 for reporting requirements and 7.2.3 for arrangement of accessory/peripheral power cords. Photograph or diagram the test setup that was used (see 10.1.12).

The quasi-peak detector function, specified for use between 150 kHz and 30 MHz, may not indicate the same subjective interference level for both narrow-band and broadband sources. This has been recognized and ways to account for the unequal interference potential of narrow-band and broadband emissions have been adopted.

NOTE—In the United States, the frequency range of powerline conducted emissions for digital devices is 450 kHz to 30 MHz unless using the alternative CISPR Publication 22 limits of 150 kHz to 30 MHz.

When the procuring organization or regulatory agency specifies two limits using different detector functions in the measuring instrument, ac powerline conducted emissions shall be measured with the specified detector functions and emissions shall comply with the appropriate limit.

Copyright © 2001 IEEE. All rights reserved.

When only one limit is specified requiring the quasi-peak detector function, and if the EUT exhibits ac powerline conducted emissions that exceed the limit with the instrument set to the quasi-peak mode, then measurements should also be made in the average mode. If the amplitude measured in the quasi-peak mode is at least 6 dB higher than the amplitude measured in the average mode, the level measured in the quasi-peak mode may be reduced by 13 dB before comparing it to the limit. If the 13 dB reduced quasi-peak mode level is below the limit, the EUT is considered to have met the limit requirements. When exercising this option, the following conditions shall be observed:

a) The measuring instruments with the quasi-peak and average detector shall have a linear response.

b) The quasi-peak and average measurement instrument shall have the same nominal bandwidth.

c) When measuring an emission with a low duty cycle, the dynamic range of the measuring instrument shall not be exceeded.

d) Provisions need to be taken to ensure correct interception of all emissions by selecting appropriate scan or dwell times.

11.6 Radiated emission measurements

The following paragraphs describe the procedures that shall be used for performing the final radiated emission measurements of ITE. Additional guidance and step-by-step procedures for preparing the setups and carrying out the required radiated emission measurements for personal computer and associated peripherals are given in Annex E.

11.6.1 Exploratory radiated emission measurements

Using the procedure in 8.3.1.1, determine the mode of operation and cable positions of the EUT system that produce the emission with the highest amplitude relative to the limit. This equipment arrangement shall be used in final radiated emission measurements of the EUT.

11.6.2 Final radiated emission measurements

Using the mode of operation and equipment arrangement of the EUT determined in 11.6.1, follow the procedure in 8.3.1.2 to perform final radiated emission measurements. Record the six highest emissions relative to the limit in the frequency range specified by the procuring or regulatory agency. See 10.1.8.2 for reporting requirements. Provide a photograph or diagram of the test setup that was used (see 10.1.12).

12. Measurement of unintentional radiators other than ITE

This clause contains information applying specifically to unintentional radiators other than ITE, such as receivers, VCRs, TV interface devices, and similar devices that are not intended to radiate RF energy. In general, testing is performed as specified in Clause 6, Clause 7, and Clause 8. with the additions, specific clarifications, and exceptions described in this clause.

This clause prescribes many procedures designed to enhance repeatability. Deviations from the prescribed procedure are permitted only where justified by typical usage and may require approval of the appropriate authority. Any deviations from the prescribed procedure shall be described and fully justified as outlined in 1.2 and 10.1.9.

Depending on the unintentional radiator operating frequency range, measurements may be specified on the average, quasi-peak or peak detector basis, or a combination of these detector functions. Because of the

 Copyright © 2001 IEEE. All rights reserved.

complexity of the individual equipment requirements and different measurement requirements, careful study of the agency regulations is recommended before proceeding with actual testing.

12.1 Measurement of receivers

This clause contains information that applies only to the measurement of emissions from receivers.

FM and TV broadcast receivers shall be measured for radiated emissions in accordance with the procedures set forth in IEEE Std 187-1990 or EIA-378. AC powerline conducted emissions shall be measured in accordance with the procedures set forth in IEEE Std 213-1987.

For nonbroadcast receivers, the test procedures in the following subclauses should be followed.

12.1.1 Operating conditions

Equipment that interacts with accessory devices (i.e., sends digital information to or receives digital information from accessory devices via interconnecting wires) shall be tested as part of a typical operational system. The selection and placement of cables, ac power cords, and system components depend on the type of EUT and shall be representative of expected equipment installation.

Equipment that does not interact with accessory devices (e.g., only sends audio information to passive accessories, such as external speakers, or provides video information to auxiliary devices, such as VCRs, that are subject to their own regulatory requirements) shall be tested with only those accessories normally marketed with the particular equipment.

If the EUT is a nonbroadcast receiver that operates on more than one frequency or over a frequency range or ranges, unless otherwise specified, all measurements shall be made with the EUT set to the number of frequencies in each band as provided in the following table:

Frequency range over which device operates	Number of frequencies	Location in the range of operation
Less than 1 MHz	1	1 near middle
1 to 10 MHz	2	1 near top, 1 near bottom
More than 10 MHz	3	1 near top, 1 near middle, and 1 near bottom

Unless otherwise specified in the individual tests, a receiver shall be supplied with the signal described below to simulate normal operation.

12.1.1.1 Superregenerative receiver

A signal generator, not the matching transmitter, shall be used to radiate an unmodulated CW signal to a superregenerative receiver at its operating frequency in order to “cohere” or to resolve the individual components of the characteristic broadband emissions from such a receiver. The level of the signal may need to be increased for this to occur.

If a superregenerative receiver is tested for radiated emissions with a resistive termination instead of an antenna connected to the antenna input terminals, apply the unmodulated signal at a level of approximately –60 dBm to the antenna terminals, using an impedance-matching network if necessary, to “cohere” the emissions. It may be necessary to adjust the signal level to accomplish this.

Copyright © 2001 IEEE. All rights reserved.

12.1.1.2 Other types of receivers

A typical signal or an unmodulated CW signal at the operating frequency of the EUT shall be supplied to the EUT for all measurements. Such a signal may be supplied by either a signal generator and an antenna in close proximity to the EUT or directly conducted into the antenna terminals of the EUT. The signal level shall be sufficient to stabilize the local oscillator of the EUT.

12.1.2 Equipment arrangement

Follow 6.2 for placement of the EUT, placement of accessories, and placement and manipulation of interconnecting cables and wires for testing an individual receiver or system.

12.1.3 AC powerline conducted emission measurements

The following paragraphs describe the procedures that may be used for making final ac powerline conducted emission measurements on receivers. Additional guidance and step-by-step procedures for preparing the setups and carrying out the required ac powerline conducted measurements are contained in Annex H.

12.1.3.1 Exploratory ac powerline conducted emission measurements

On any convenient frequency specified in 12.1.1, use the procedure in 7.2.3, while applying the appropriate signal to the EUT, to determine the operating frequency and cable or wire positions of the EUT system that produce the emission with the highest amplitude relative to the limit. This equipment arrangement shall be used in making final measurements of ac powerline conducted emissions.

12.1.3.2 Final ac powerline conducted emission measurements

Using the operating frequency and equipment arrangement of the EUT determined in 12.1.3.1, follow the procedure in 7.2.4, while applying the appropriate signal to the EUT, to perform final ac powerline conducted emission measurements.

Record the six highest EUT emissions relative to the limit of each of the current-carrying conductors of the power cords of the equipment that comprises the EUT over the frequency range specified by the procuring or regulatory agency. See 10.1.8.1 for reporting requirements. Diagram or photograph the test setup that was used (see 10.1.12).

12.1.4 Radiated emission measurements

Radiated emissions from receivers may be measured using a terminating resistor, rather than an antenna, connected to the antenna input ports or terminals, providing the receiver is also tested for antenna-conducted power as specified in 12.1.5.

The following paragraphs describe the procedures that may be used for making final measurements of radiated emissions from receivers with either antennas or terminating resistors connected to the antenna input terminals. Additional guidance and step-by-step procedures for preparing the setups and carrying out the required radiated emission measurements are contained in Annex H.

12.1.4.1 Exploratory radiated emission measurements

On the number of frequencies specified in 12.1.1, use the procedure in 8.3.1.1, while applying the appropriate signal to the EUT, to determine the operating frequency and cable or wire positions of the EUT system that produce the emission with the highest amplitude relative to the limit. The EUT antenna shall be manipulated through typical positions during exploratory testing to maximize emission levels. In addition, exploratory radiated emissions testing of hand-held or body-worn devices shall include rotation of the EUT

 Copyright © 2001 IEEE. All rights reserved.

through three orthogonal axes to determine the attitude that maximizes the emissions. This equipment arrangement shall be used in final measurements of radiated emission from the EUT.

12.1.4.2 Final radiated emission measurements

Using the operating frequency, attitude and equipment arrangement of the EUT determined in 12.1.4.1, follow the procedure in 8.3.1.2, while applying the appropriate signal to the EUT, to perform final radiated emission measurements.

Record the six highest EUT emissions relative to the limit over the frequency range specified by the procuring or regulatory agency. See 10.1.8.2 for reporting requirements. Diagram or photograph the test setup that was used (see 10.1.12).

12.1.5 Antenna-conducted power measurements

Antenna-conducted power measurements shall be performed when a receiver is measured for radiated emissions with a terminating resistor instead of an antenna connected to the antenna input terminals of the device. Power available from the receive antenna terminals is to be determined by measurement of the voltage present at these terminals. For frequencies below or equal to 1000 MHz, a quasi-peak detector shall be used for these measurements. If the peak detected signals are below the limit, then no further investigation of the quasi-peak readings is required. For frequencies above 1000 MHz, both a peak and an average detector shall be used for these measurements. If the unit complies with the peak limits, then no further investigation of the average readings is required.

NOTE—Where agencies specify limits for both average and peak detection, if the peak measured value meets the average limit, it is unnecessary to perform an average measurement.

Antenna-conducted power measurements shall be performed with the EUT antenna terminals connected directly to either a spectrum analyzer or another measuring instrument (see 4.1.1), if the antenna impedance matches the impedance of the measuring instrument. Otherwise, use a balun or impedance-matching network to connect the measuring instrument to the antenna terminals of the EUT. Losses in decibels in any balun or impedance-matching network used shall be added to the measured value in dB/μV.

With the receiver tuned to one of the number of frequencies specified in 12.1.1, measure both the frequency and voltage present at the antenna input terminals over the frequency range specified in the individual equipment requirements. Repeat this measurement with the receiver tuned to another frequency until the number of frequencies specified in 12.1.1 has been successively measured. Power available from the receive antenna terminals is the ratio of V^2/R, where V is the loss-corrected voltage measured at the antenna terminals, and R is the impedance of the measuring instrument. See 10.1.8.3 for reporting requirements.

Additional guidance in step-by-step procedures for preparing, setting up, and carrying out the required measurements are contained in H.5.

12.2 Measurement of TV interface devices

A TV interface device may be a TV (video) game, a VCR, or a cable TV converter.

12.2.1 Operating conditions

Unless otherwise specified in the individual tests, all input terminals or connectors on a TV interface device shall be terminated in the proper impedance. However, the output ports or connectors of these devices shall be connected to either the cable provided with the device or a cable of typical length. Unless otherwise specified in the individual tests, the output cable shall be connected to either a terminating resistor of the proper

Copyright © 2001 IEEE. All rights reserved.

impedance or the antenna transfer switch provided with the device. All other antenna transfer switch ports shall be terminated in the proper impedance.

For TV interface devices equipped with multiple inputs, the signals described below shall be individually applied during exploratory tests to determine which input produces the highest emission relative to the limit.

NOTE—Unless specified in an individual test, a VCR shall be operated in the playback and record modes. In addition, the following record signals shall be investigated to determine which produces the highest emission relative to the limit: NTSCTV signal supplied through the antenna input port, a 1 V peak-to-peak VITS as shown in Figure 16 supplied through the video input port, and a 5 V peak-to-peak VITS signal supplied through the video input port.

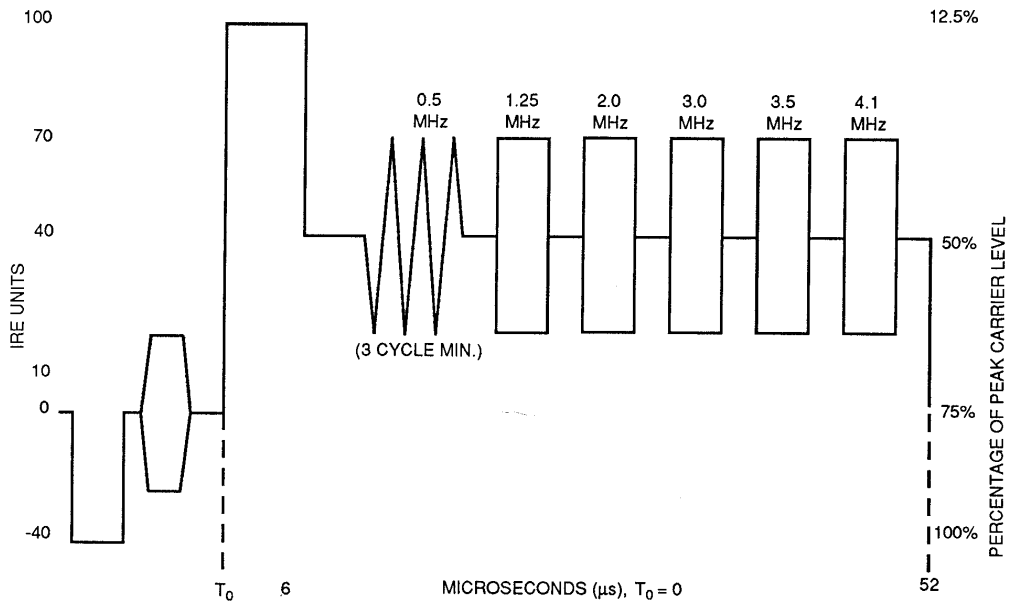

NOTES: (1) An off time, as shown between frequency bursts, is recommended.
Each burst equals 60 IRE units peak to peak centered of 40 IRE.
(2) Rise and fall of white bar shall have a rise time of not less than 0.2 µs.

Figure 16—Multiburst test signal (full field)

12.2.1.1 Internal modulation sources

For devices that contain an internal modulation source, e.g., TV games, that source shall be active during testing.

12.2.1.2 Video modulation sources

For devices that have a baseband video input, e.g., VCRs, a VITS shall be applied alternately with an amplitude of both 1 V and 5 V peak to peak.

12.2.1.3 RF Modulation sources

For devices that have antenna terminals for reception of over-the-air TV broadcast signals, e.g. VCRs, an NTSC TV signal shall be supplied. For devices that have a cable TV input, e.g., CSTD, two cable TV input signal levels shall be supplied alternately, first, 0 dB (mV), and then 25 dB (mV).

 Copyright © 2001 IEEE. All rights reserved.

12.2.1.4 Other external modulation sources

For devices that use external modulation sources other than that specified above, apply a typical signal.

12.2.2 Equipment arrangement

Follow 6.2 for placement of the EUT, placement of accessories, and placement and manipulation of interconnecting cables and wires for testing an individual TV interface device or system.

An antenna transfer switch that is connected to the output cable of a TV interface device shall be manipulated with the output cable as if it were an interconnecting cable. The antenna transfer switch is not stationary like an accessory to the EUT.

12.2.3 AC powerline conducted emission measurements

The following paragraphs describe the procedures that may be used for performing final ac powerline conducted emission measurements on TV interface devices. Additional guidance and step-by-step procedures for preparing the setups and carrying out the required ac powerline conducted emission measurements are contained in Annex H.

12.2.3.1 Exploratory ac powerline conducted emission measurements

On each output channel of the TV interface device, use the procedure in 7.2.3, while applying the appropriate signals to the EUT, to determine the output channel, operating mode, and cable or wire positions of the EUT system that produce the emission with the highest amplitude relative to the limit. This equipment arrangement shall be used in making final ac powerline conducted emission measurements.

12.2.3.2 Final ac powerline conducted emission measurements

Using the output channel, operating mode, and arrangement of the EUT determined in 12.2.3.1, follow the procedure in 7.2.4, while applying the appropriate signals to the EUT, to perform final ac powerline conducted emission measurements.

Record the six highest EUT emissions relative to the limit of each of the current-carrying conductors of the power cords of the equipment that comprises the EUT over the frequency range specified by the procuring or regulatory agency. Diagram or photograph the test setup that was used (see 10.1.2).

12.2.4 Radiated emission measurements

The following paragraphs describe the procedures that may be used to make final radiated emission measurements on TV interface devices. Additional guidance and step-by-step procedures for preparing the setups and carrying out the required radiated emission measurements are contained in Annex H.

12.2.4.1 Exploratory radiated emission measurements

On each output channel of the TV interface device, use the procedure in 8.3.1.1, while applying the appropriate signals to the EUT, to determine the output channel, operating mode, and cable or wire positions of the EUT system that produce the emission with the highest amplitude relative to the limit. This equipment arrangement shall be used in making final radiated emission measurements.

Copyright © 2001 IEEE. All rights reserved.

12.2.4.2 Final radiated emission measurements

Using the output channel, operating mode, and arrangement of the EUT determined in 12.1.4.1, follow the procedure in 8.3.1.2, while applying the appropriate signals to the EUT, to perform final radiated emission measurements.

Record the six highest EUT emissions relative to the limit over the frequency range specified by the procuring or regulatory agency. See 10.1.8.2 for reporting requirements. Diagram or photograph the test setup that was used (see 10.1.2).

12.2.5 Output and spurious conducted level measurements

The output or spurious signal level is the maximum voltage level present at the output terminal(s) of a TV interface device (i.e., VCR, CSTD, or TV game) on a particular frequency during normal use of the device. The maximum voltage corresponds to the peak envelope power of a modulated signal during maximum amplitude peaks.

Measurements shall be made of the levels of the aural carrier, visual carrier, and all spurious emissions for each TV channel on which the device operates by following the procedure below.

Use the same arrangement and test setup used for radiated measurements to measure the output signal level of the EUT. Connect the output cable of the EUT to the measuring instrument using the length of interconnecting cable provided with the TV interface device, recommended in the instruction manual, or normally employed by the consumer. When the output cable is coaxial cable, measurements shall be made by direct connection to the measuring instrument with proper impedance matching between the measuring instrument and the EUT. If the output cable is 300 Ω transmission line (twin-lead), measurements are to be made through an appropriate balun with connecting cables kept as short as practical. It may be necessary to connect a high-gain, low-noise amplifier between the EUT and the measuring instrument to increase the signal-to-noise ratio of the signals being measured.

Support the cable between the EUT and the measuring instrument in a straight horizontal line so it has at least 75 cm clearance from any conducting surface. Terminate all unused inputs and outputs on the EUTs antenna transfer switch with the proper impedance.

Set the bandwidth of the measuring instrument according to the frequency being measured as listed in the following table.

Measurement frequency	Bandwidth
Below 30 MHz	10 kHz
30 to 1000 MHz	100 kHz
Above 1000 MHz	1 MHz

Turn on the EUT and allow a sufficient period of time for the unit to warm up to its normal operating condition. Provide the EUT with a typical signal consistent with normal operation. For each channel on which the device operates and in each mode in which the device operates, measure and record the level the video carrier, audio carrier, the three highest spurious emissions above the video carrier, and the three highest spurious emissions below the video carrier over the frequency range specified in the individual

 Copyright © 2001 IEEE. All rights reserved.

equipment requirements, the frequency of the emission and output channel of the EUT. See 10.1.8.4 for reporting requirements.

Additional guidance in step-by-step procedures for preparing, setting up, and carrying out the required measurements is contained in H.6.

12.2.6 Antenna transfer switch measurements for unintentional radiators

Measurements of antenna transfer switch isolation shall be made with the unintentional radiator configured for typical operation. Isolation shall be measured for all positions of a cable TV antenna transfer switch on the frequencies specified in the individual tests. Isolation shall be measured for all positions of an antenna transfer switch on all output channels of a TV interface device. All unused RF ports or terminals of the unintentional radiator or the antenna transfer switch shall be terminated with the proper impedance during these measurements.

12.2.6.1 Cable TV antenna transfer switches

The following procedure shall be used to measure the isolation of a cable TV selector switch that is either built in to an unintentional radiator or is a stand-alone switch. The isolation of a cable TV antenna transfer switch shall be measured on the following frequencies: 54, 100, 150, 200, 250, 300, 350, 400, 450, 500, and 550 MHz using the procedure below. If the device or switch is equipped with more than two antenna input ports or terminals, repeat the following procedure until isolation for each pair of input ports has been measured.

NOTE—Only input ports on the device or switch intended for connection to an antenna are considered antenna input ports.

The cable TV antenna transfer switch isolation, expressed in decibels, is the difference between the level of a signal going into the port that is used for cable TV input to the switch and the level of the same signal coming out of an antenna input port of the transfer switch. Be sure to compare emission levels of the same frequency. The signal levels are expressed in decibel units.

Position the device containing the switch in accordance with 6.2.1 or 6.2.2.1. Place a stand-alone cable TV antenna transfer switch on a nonconductive table 80 cm in height above the ground. Connect a signal generator to the port that is used for cable TV input with a suitable length of coaxial cable. Connect the port of the switch designated for antenna input to the measuring instrument with a suitable length of coaxial cable. Support both of these cables in a straight horizontal line so they have at least 75 cm clearance from any conducting surface. If necessary, impedance-matching devices shall be used and they shall be connected as close as possible to the port(s) on the antenna transfer switch. Terminate all other antenna input ports on the transfer switch in the proper impedance.

Turn on the device containing the cable TV switch, if appropriate. Adjust the output of the signal generator to provide a CW signal at a level of 0 dBm on one of the above frequencies. Tune the measuring instrument to the signal generator frequency. Set the detector function to the peak mode, and adjust the bandwidth and attenuator settings to any convenient position to obtain the highest level. Do not change the measuring instrument settings during the measurements on this frequency. Change the positions of the switch on the antenna transfer switch, and record the level and frequency of the signal and the position of the switch that gives the highest indication on the measuring instrument. Turn the device off, and repeat this measurement.

Without changing the settings on the measuring instrument, disconnect the antenna transfer switch from the test setup.

Connect the signal generator to the measuring instrument using the matching transformers and coaxial cables that were connected to the switch. Tune the frequency control on the measuring instrument to obtain

Copyright © 2001 IEEE. All rights reserved.

the highest level, measure, and record the level of this signal. Record the difference between the level going directly into the measuring instrument and the level going through the antenna transfer switch. This is the cable TV antenna transfer switch isolation for that frequency.

Repeat this process at each frequency listed above. See 10.1.8.5 for reporting requirements.

Additional guidance in step-by-step procedures for preparing, setting up, and carrying out the required measurements is contained in H.7.

12.2.6.2 TV interface device switches with coaxial connectors

The following shall apply to measurement of transfer switch isolation if the antenna input port or terminal is intended for use with coaxial cable.

TV interface device transfer switch isolation is the difference between the levels, expressed in decibel units, of a signal going into one antenna input port of the switch and that of the same signal coming out of another antenna input port of the transfer switch. Be sure to compare emission levels of the same frequency.

The isolation of an antenna transfer switch of an unintentional radiator equipped with coaxial connectors shall be performed by measuring the maximum voltage of the visual carrier of the unintentional radiator present at the antenna input ports on the switch using the following procedure. The maximum voltage corresponds to the peak envelope power of a modulated signal during maximum amplitude peaks.

Place the unintentional radiator and its switch on a nonconductive table 80 cm in height above ground. Using an impedance-matching device, if necessary, connect a length of coaxial cable between the antenna input port of the switch and the measuring instrument. Support the cable between the switch and the measuring instrument in a straight horizontal line so it has at least 75 cm clearance from any conducting surface. It may be necessary to connect a high-gain, low-noise amplifier between the impedance-matching device and the measuring instrument to increase the signal-to-noise ratio of the signal being measured.

Tune the measuring instrument to the output channel of the unintentional radiator, set the detector function to the peak mode, and adjust the bandwidth and attenuator settings to any convenient position to obtain sufficient signal-to-noise ratio. While applying the appropriate signals specified in 12.1.1, measure and record the voltage level present at the antenna input port of the TV interface device and the output channel of the TV interface device. For switch isolation measurements of a TV interface device, the video carrier of the device is the only signal that needs to be measured.

If the TV interface device operates on other output frequencies, repeat this procedure for all output frequencies.

If the device or switch is equipped with more than two antenna input ports, repeat the procedure until isolation for each pair of antenna input ports has been measured. See 10.1.8.5 for reporting requirements.

NOTE—Only input ports on the device or switch intended for connection to an antenna are considered antenna input ports.

Additional guidance in step-by-step procedures for preparing, setting up, and carrying out the required measurements is contained in H.8.

12.2.6.3 TV interface device switches with balanced transmission line connectors

The following shall apply to measurement of the transfer switch isolation if the antenna input port or terminal is intended for use with a balanced transmission line such as twin-lead.

 Copyright © 2001 IEEE. All rights reserved.

The isolation of an antenna transfer switch of an unintentional radiator equipped with balanced line connectors shall be performed by measuring the maximum voltage of the visual carrier of the unintentional radiator present at the antenna input ports on the switch using the following procedure. The maximum voltage corresponds to the peak envelope power of a modulated signal during maximum amplitude peaks.

Place the unintentional radiator and its switch on a nonconductive table 80 cm in height above ground. Connect a section of twin-lead whose length is three-quarter of a wavelength of the TV interface device output channel frequency between the antenna input port of the switch and a balanced RF voltmeter or a balun that is in turn connected to the measuring instrument.

Support the twin-lead between the switch and the measuring instrument in a straight horizontal line so it has at least 75 cm clearance from any conducting surface. It may be necessary to connect a high-gain, low-noise amplifier between the balun and the measuring instrument to increase the signal-to-noise ratio of the signal being measured.

Tune the measuring instrument to the output channel of the unintentional radiator, set the detector function to the peak mode, and adjust the bandwidth and attenuator settings to any convenient position to obtain sufficient signal-to-noise ratio. While applying the appropriate signal(s) specified in 12.1.1, measure and record the voltage level of the video carrier present at the antenna input port with three-quarter wavelength transmission line and with transmission lines of decreasing line length, in at least two equal decrements (total of three measurements, one each at three-quarter, one-half, and one-quarter transmission line length), to a length of one-quarter wavelength. For switch isolation measurements of a TV interface device, the video carrier of the device is the only signal that needs to be measured.

The isolation of a transfer switch that uses a balanced transmission line is taken to be the median of the three values obtained in these measurements. Record the three measured levels, the output channel of the TV interface device, and the length of transmission line that produced each level.

If the TV interface device operates on other output frequencies, repeat this procedure for all output frequencies. If the device or switch is equipped with more than two antenna input ports, repeat the procedure until isolation for each pair of antenna input ports has been measured. See 10.1.8.5 for reporting requirements.

NOTE—Only input ports on the device or switch intended for connection to an antenna are considered antenna input ports.

Additional guidance in step-by-step procedures for preparing, setting up, and carrying out the required measurements is contained in H.8.

13. Measurement of intentional radiators

This clause contains information applying specifically to intentional radiators, such as garage door opener transmitters and baby monitors. In general, testing is performed as specified in Clause 6, Clause 7, and Clause 8. with the additions, specific clarifications, and exceptions described in this clause.

This clause prescribes many procedures designed to enhance repeatability. Deviations from the prescribed procedure are permitted only where justified by typical usage, but may require approval of the appropriate authority. Any deviations from the prescribed procedure shall be described and fully justified as outlined in 1.2 and 10.1.9.

Depending on the operating frequency of the intentional radiator, measurements may be specified on the average, quasi-peak or peak basis, or a combination of these detector functions. Because of the complexity

Copyright © 2001 IEEE. All rights reserved.

of the individual equipment requirements, careful study of these requirements is recommended before proceeding with testing.

13.1 Requirements of intentional radiators

This subclause contains information that applies only to the testing of intentional radiators.

13.1.1 Operating conditions

The EUT shall be tested on the design frequency of the device. In the case of EUTs that can operate on more than one frequency, unless otherwise specified in the individual tests, measurements shall be made with the EUT set to a frequency or frequencies as provided in the following table:

Frequency range over which device operates	Number of frequencies	Location in the range of operation
Less than 1 MHz	1	1 near middle
1 to 10 MHz	2	1 near top, 1 near bottom
More than 10 MHz	3	1 near top, 1 near middle, and 1 near bottom

Devices that use frequency-sweeping techniques shall have their frequency stopped at each of the frequencies specified above.

If the EUT transmits pulsed modulation, the modulation shall be adjusted to produce the maximum duty cycle possible during measurements.

13.1.1.1 Applied modulation

Unless specified in the individual test instructions, typical modulation does not need to be applied during testing except when modulation is needed to produce a transmitted signal (e.g., single-sideband suppressed carrier transmitters). When modulation is specified in the individual tests, voice-only modulated devices (200 to 3000 Hz), except cordless telephones, shall have a 1000 Hz tone at 100 dB SPL (sound pressure level) applied 10 cm from the microphone. (0 dB SPL is 20 μPa.) For a cordless telephone, the input signal shall be a 2500 Hz tone of sufficient level to produce 85% modulation. This shall be construed as the level that produces 85% of the maximum obtainable frequency deviation measured at a point 26 dB down from the unmodulated carrier signal level (e.g., if the maximum obtainable frequency deviation is determined to be 5 kHz, the input level that produces 4.25 kHz deviation would be used). The input signal shall be coupled directly to the audio input stage of the cordless telephone for both the base and the remote unit. When modulation is required in an individual test, devices modulated from internal sources shall be tested with typical modulation applied. If a device is equipped with input connectors for external modulation, typical modulating signals shall be applied at the maximum-rated input level for the device when modulation is required in an individual test (e.g., apply a 1000 Hz tone to an input for an external microphone).

13.1.2 Equipment arrangement

Follow 10.1.9 for placement of the EUT, placement of accessories, and placement and manipulation of interconnecting cables and wires.

 Copyright © 2001 IEEE. All rights reserved.

13.1.3 AC powerline conducted emission measurements

The following paragraphs describe the procedures that may be used for making final ac powerline conducted emission measurements on intentional radiators. Additional guidance and step-by-step procedures for preparing the setups and carrying out the required ac powerline conducted measurements are contained in Annex I.

13.1.3.1 Exploratory ac powerline conducted emission measurements

If the EUT uses a detachable antenna, these measurements shall be made with a suitable dummy load connected to the antenna output terminals; otherwise, the tests shall be made with the antenna connected and, if adjustable, fully extended. Exploratory tests shall be run both with the modulating signal(s) specified in 13.1.1.1 applied to the EUT and with no modulating signal applied to the EUT. On any one convenient frequency specified in 13.1.1, use the procedure in 7.2.3, while applying the appropriate modulating signal to the EUT, to determine the cable or wire position of the EUT system that produces the emission with the highest amplitude relative to the limit. This equipment arrangement shall be used in making final ac powerline conducted emission measurements.

13.1.3.2 Final ac powerline conducted emission measurements

Using the arrangement of the EUT determined in 13.1.3.1, follow the procedure in 7.2.4, while applying the appropriate modulating signal to the EUT, to perform final ac powerline conducted emission measurements.

Record the six highest EUT emissions relative to the limit of each of the current-carrying conductors of the power cords of the equipment that comprises the EUT over the frequency range specified by the procuring or regulatory agency. See 10.1.8.1 for reporting requirements. Diagram or photograph the test setup that was used (see 10.1.2).

13.1.4 Radiated emission measurements

The following paragraphs describe the procedures that may be used for making final radiated emission measurements on intentional radiators. Additional guidance and step-by-step procedures for preparing the setups and making the required radiated emission measurements are contained in Annex I.

13.1.4.1 Exploratory radiated emission measurements

On the number of frequencies specified in 13.1.1, use the procedure in 8.3.1.1, while applying the appropriate modulating signal to the EUT, to determine cable or wire positions of the EUT system that produce the emission with the highest amplitude relative to the limit. An antenna shall be connected to the EUT. If the EUT is equipped with or uses an adjustable antenna, the EUT antenna shall be manipulated through typical positions and lengths during exploratory testing to maximize emission levels. In addition, exploratory radiated emission testing shall be run as follows:

a) With the EUT powered in turn from both ac and dc (battery) power, if the device has these capabilities

b) With the EUT supplied in turn with the appropriate modulation specified in 13.1.1.1 and without modulation

c) With hand-held or body-worn devices rotated through three orthogonal axes to determine which attitude and equipment arrangement produces the highest emission relative to the limit, (the attitude and equipment arrangement that produces the highest emission relative to the limit shall be used in making final radiated emission measurements).

Copyright © 2001 IEEE. All rights reserved.

13.1.4.2 Final Radiated emission measurements

Using the attitude and equipment arrangement of the EUT determined in 13.1.4.1, follow the procedure in 8.3.1.2, while applying the appropriate modulating signal to the EUT, to perform final radiated emission measurements on the number of frequencies specified in 13.1.1.

On each of the frequencies to which the device is tuned, record the frequency and amplitude of the highest fundamental emission, the frequency and amplitude of the three highest harmonic or spurious emissions relative to the limit, and the frequency and amplitude of the three highest restricted band emissions relative to the limit. See 10.1.8.2 for reporting requirements. Diagram or photograph the test setup that was used (see 10.1.12).

NOTE—For the purposes of this standard, spurious emissions shall include out-of-band emissions typically associated with or generated by the modulating signal.

Devices transmitting pulsed emissions and subject to a limit requiring an average detector function for radiated emissions shall initially be measured with an instrument that uses a peak detector. A radiated emission measured with a peak detector may then be corrected to a true average using the appropriate factor for emission duty cycle. This correction factor relates the measured peak level to the average limit and is derived by averaging absolute field strength over one complete pulse train that is 0.1 s, or less, in length. If the pulse train is longer than 0.1 s, the average shall be determined from the average absolute field strength during the 0.1 s interval in which the field strength is at a maximum. Instructions on calculating the duty cycle of a transmitter with pulsed emissions are provided in I.4, step j).

NOTE—The bandwidth of the measuring instrument shall be wider than the pulse repetition frequency of the transmitted signal to measure its maximum peak level. See ANSI C63.22 for guidelines on selecting bandwidth and determining pulse desensitization factors, as necessary.

13.1.5 Operating frequency measurements

If required, the operating or transmitting frequency of an intentional radiator should be measured in accordance with the following procedure to ensure that the device operates outside certain precluded frequency bands and within the frequency range. No modulation needs to be supplied to the intentional radiator during these tests, unless modulation is required to produce an output, e.g., single-sideband suppressed carrier transmitters.

Operating frequency measurements may be made at an ambient room temperature if it is within the range of +15 to +25 °C; otherwise, an environmental temperature test chamber set for a temperature of +20 °C shall be used. If possible, an antenna should be connected to the EUT, because use of a dummy load could affect the output frequency of the EUT. If the EUT is equipped with or uses an adjustable-length antenna, it should be fully extended.

Position the intentional radiator as specified in 6.2. Supply the EUT with nominal ac voltage, or install a new or fully charged battery in the EUT. Turn the EUT on, and couple its output to the measuring instrument by connecting an antenna to the measurement instrument with a suitable length of coaxial cable.

NOTE—A frequency counter or other frequency-measuring device that has an adequate level of accuracy as specified by the procuring or regulatory agency is the recommended measuring instrument.

Adjust the location of the measurement antenna and the controls on the measuring instrument to obtain a suitable signal level (i.e., a level that will not overload the measuring instrument, but is strong enough to allow measurement of the operating or fundamental frequency of the EUT).

Tune the EUT to any one of the number of frequencies specified in 13.1.1. Turn the EUT off, and place it inside an environmental chamber if appropriate. Allow the chamber to stabilize at +20 °C before proceeding.

 Copyright © 2001 IEEE. All rights reserved.

Turn on the EUT, and record the operating frequency of the intentional radiator at startup and two, five, and ten minutes after startup.

Turn the EUT off and allow it to cool to the ambient temperature, and then repeat this procedure for the number of the frequencies specified in 13.1.1. Four measurements are made at each operating frequency. See 10.1.8.6 for reporting requirements.

Additional guidance in step-by-step procedures for preparing, setting up, and carrying out the required measurements is contained in I.5.1.

13.1.6 Frequency stability measurements

When frequency stability measurements on an intentional radiator are required, the following procedures of this clause should be used. No modulation needs to be supplied to the intentional radiator during these tests, unless modulation is required to produce an output, e.g., single-sideband suppressed carrier transmitters.

13.1.6.1 Stability with respect to ambient temperature

Supply the EUT with nominal ac voltage, or install a new or fully charged battery in the EUT. If possible, a dummy load should be connected to the EUT, because an antenna near the metallic walls of an environmental test chamber could affect the output frequency of the EUT. If the EUT is equipped with a permanently attached, adjustable-length antenna, the EUT should be placed in the center of the chamber with the antenna adjusted to the shortest length possible. Turn the EUT on, and tune it to one of the number of frequencies required in 13.1.1.

Couple the intentional radiator output to the measuring instrument by connecting an antenna to the measurement instrument with a suitable length of coaxial cable and placing the measurement antenna near the EUT (e.g., 15 cm away) or by connecting a dummy load to the measuring instrument through an attenuator, if necessary.

NOTE—An instrument that has an adequate level of accuracy as specified by the procuring or regulatory agency is the recommended measuring instrument.

Adjust the location of the measurement antenna and the controls on the measuring instrument to obtain a suitable signal level (i.e., a level that will not overload the measuring instrument, but is strong enough to allow measurement of the operating or fundamental frequency of the EUT).

Turn the EUT off, and place it inside an environmental temperature chamber. For devices that are normally operated continuously, the EUT may be energized while inside the test chamber. For devices that have oscillator heaters, energize only the heater circuit while the EUT is inside the chamber.

Set the temperature control on the chamber to the highest specified EUT operating temperature, and allow the temperature inside the chamber to stabilize at the set temperature before starting frequency measurements.

While maintaining a constant temperature inside the environmental chamber, turn the EUT on and record the operating frequency at startup and two, five, and ten minutes after the EUT is energized. Four measurements in total are made.

Repeat the above procedure until the number of frequencies specified in 13.1.1 has been measured. After all measurements have been made at the highest specified temperature, turn the EUT off.

Copyright © 2001 IEEE. All rights reserved.

Repeat the above measurement process for the EUT with the test chamber set at the lowest temperature specified by the regulatory or procuring agency. Measurements shall be made at the number of frequencies specified in 13.1.1. See 10.1.8.7 for reporting requirements.

Additional guidance in step-by-step procedures for preparing, setting up, and carrying out the required measurements is contained in I.5.2.

13.1.6.2 Stability with respect to input voltage

These measurements may be made at ambient room temperature if it is within the range of +15 to +25 °C; otherwise, an environmental temperature test chamber set for a temperature of +20 °C shall be used. An antenna should be connected to the antenna output terminals of the EUT if possible. If the EUT is equipped with or uses an adjustable-length antenna, it should be fully extended.

Position the intentional radiator as specified in 6.2. Supply the EUT with nominal ac voltage or install a new or fully charged battery in the EUT. Turn on the EUT, and couple its output to a frequency counter or other frequency-measuring instrument.

NOTE—An instrument that has an adequate level of accuracy as specified by the procuring or regulatory agency is the recommended measuring instrument.

Tune the EUT to one of the number of frequencies required in 13.1.1. Adjust the location of the measurement antenna and the controls on the measuring instrument to obtain a suitable signal level (i.e., a level that will not overload the measuring instrument, but is strong enough to allow measurement of the operating or fundamental frequency of the EUT).

Turn the EUT off, and place it in an environmental chamber if appropriate. Allow sufficient time for the chamber to stabilize at +20 °C before proceeding. Turn the EUT on, and measure the EUT operating frequency at startup, and two, five, and ten minutes after startup. For battery and ac-powered devices, repeat the above procedure until the number of frequencies specified in 13.1.1 has been measured.

If the EUT is powered from the ac powerline, supply it with 85% of the nominal ac voltage and repeat the above procedure for the number of frequencies specified in 13.1.1. If the EUT is battery-operated, see 10.1.8.7 for reporting requirements.

If the EUT is powered from the ac powerline, supply it with 115% of the nominal ac voltage and repeat the above procedure for the number of frequencies specified in 13.1.1. Allow the environmental chamber temperature to stabilize before proceeding. See 10.1.8.7 for reporting requirements.

Additional guidance in step-by-step procedures for preparing, setting up, and carrying out the required measurements is contained in I.5.3.

13.1.7 Occupied bandwidth measurements

When occupied bandwidth measurements on an intentional radiator are required, the following procedures of this clause should be used.

The bandwidth is measured at an amplitude level reduced from the reference level by a specified ratio. The reference level is the level of the highest amplitude signal observed from the transmitter at either the fundamental frequency or the first-order modulation products in all typical modes of operation, including the unmodulated carrier, even if atypical. Once the reference level is established, the equipment is conditioned with typical modulating signals to produce the worst-case (i.e., the widest) bandwidth. If no bandwidth requirement is specified by the procuring or regulatory agency, measure the bandwidth at –26 dB with respect to the reference level.

 Copyright © 2001 IEEE. All rights reserved.

In order to measure the modulated signal properly, a resolution bandwidth that is small compared with the bandwidth required by the procuring or regulatory agency shall be used on the measuring instrument. However, the 6 dB resolution bandwidth of the measuring instrument shall be set to a value greater than 5% of the bandwidth requirements. When no bandwidth requirements are specified, the minimum 6 dB resolution bandwidth of the measuring instrument is given in the following table:

Fundamental frequency	Minimum resolution bandwidth
9 kHz to 30 MHz	1 kHz
30 to 1000 MHz	10 kHz
1000 MHz to 40 GHz	100 kHz

NOTE—At the frequency range boundaries, the smaller resolution bandwidth shall be used.

Position the intentional radiator as specified in 6.2.

Supply the EUT with nominal ac voltage, or install a new or fully charged battery in the EUT. Turn the EUT on, and set it to any convenient frequency within its operating range. Set a reference level on the measuring instrument at any location that will allow measuring the specified bandwidth (e.g., –26 dB below the unmodulated carrier).

Supply the EUT with modulation as specified in 13.1.1.1. Observe and record with plotted graphs or photographs the worst-case (i.e., widest) occupied bandwidth produced by these different modulation sources. See 10.1.8.8 for reporting requirements.

Additional guidance in step-by-step procedures for preparing, setting up, and carrying out the required measurements is contained in I.6.

13.1.8 Input power measurements

When required, the input power to either an intentional radiator or the final RF stage (exclusive of filament or heater power) of an intentional radiator should be measured using the following procedure.

Position the intentional radiator as specified in 6.2. Supply the EUT with nominal ac voltage, or install a new or fully charged battery in the EUT. Typical modulation shall be applied to the EUT during these tests. If the EUT accepts modulation from multiple sources, each modulation source shall be applied individually to determine which produces the highest input power level.

Select any one convenient operating frequency of the intentional radiator. For input power measurements for an intentional radiator, use a voltmeter and ammeter and measure the voltage and current at the ac or battery input terminals to the intentional radiator. For input power measurements to the final RF stage, use a dc voltmeter and ammeter and measure the voltage and current at the input to the final amplifier stage of the intentional radiator. The input power is the product of the measured voltage and current. See 10.1.8.2 for reporting requirements.

Additional guidance in step-by-step procedures for preparing, setting up, and carrying out the required measurements is contained in I.7.

Copyright © 2001 IEEE. All rights reserved.

13.2 Requirements of field disturbance sensors (RF intrusion alarms)

This clause contains information that applies only to the testing of field disturbance sensors.

Refer to IEEE Std 475-1983 for measurements of field disturbance sensors or RF on alarms.

14. Limit relaxation for transients

For many devices, transients of short duration repeated infrequently do not cause significant interference. For this reason (when permitted by the responsible agency), when transients whose individual durations do not exceed 200 ms (i.e., "clicks" as used in CISPR Publication 16) occur and exceed the radiated or conducted limit for continuous disturbances, unless otherwise specified, the limit can be relaxed for the transients according to the following table, where *N* is the number of clicks/minute above the limit:

Click rate *N*	**Relaxation, dB**
< 0.2	44
$0.2 \leq N < 30$	$20 \lg \left\langle \frac{30}{N} \right\rangle$ dB
> 30	0

The EUT is compliant if no more than 25% of the clicks (that exceed the basic limit) exceed the relaxed limit.

NOTE—In the United States, the FCC does not permit the use of this procedure.

 Copyright © 2001 IEEE. All rights reserved.

Annex A

(informative)

Site attenuation using discrete frequencies

The discrete frequency method is performed using a worksheet approach (Heirman [B16]). The sample worksheet

— Sequences the site attenuation measurements;

— Directs the application of various corrections;

— Provides a method for comparing deviations of the measured NSA data from the NSA for an ideal site.

Table A.1 contains the recommended worksheet for making the measured NSA comparisons with the values for the ideal site obtained in Table 1, Table 2, and Table 3. The entries are used for solving Equation (1) (see 5.4.6.4). The entries for each column are as follows:

Column 1: Frequency between 30 and 1000 MHz in steps indicated in Table 1, Table 2, and Table 3.

Column 2: The polarization of both transmit and receive antennas with respect to the reference groundplane.

Column 3: V_{Direct} is the level at the receiver or spectrum analyzer when the coaxial feed lines connected to each antenna are directly connected together (points 1 and 2 connected in Figure 6 and Figure 7) [dB (μV)].

Column 4: V_{Site} is the level measured at the receiver or spectrum analyzer when the receive antenna is searched in height for the maximum transmitted signal that is required for site attenuation measurements. The level of the signal generator is the same as for the column 3 measurement [dB (μV)].

Column 5: $\Delta AF_{TOT} = 0$ for all vertical and horizontal site attenuation measurements made at separations of 10 and 30 m for tunable dipoles and for all other measurements using broadband antennas. ΔAF_{TOT} is not equal to 0 for site attenuation measurements at 3 m separation using tunable dipoles (see Table 4 for these mutual coupling corrections) [dB].

Column 6: A = Site attenuation (algebraic sum of column 3 less column 4 less column 5) [(dB)].

Column 7: AF_T = Transmit antenna factor (accurately measured for this antenna) [dB (1/m)].

Column 8: AF_R = Receive antenna factor (accurately measured for this antenna) [dB (1/m)].

Column 9: A_N = Measured normalized site attenuation–NSA (column 6 less column 7 less column 8). This is equivalent to A_N given by Equation (1) [(dB)].

Column 10: Theoretical NSA (see appropriate values for site attenuation geometry and antennas used in Table 1, Table 2, and Table 3).

Column 11: Deviation = column 10 less column 9 [(dB)].

Table A.2 is an example of the use of the worksheet. Consider a 3 m separation horizontal site attenuation measurement using tunable resonant half-wave dipoles at 80 MHz.

Copyright © 2001 IEEE. All rights reserved.

Table A.1—Site attenuation worksheet

(1)	(2)	(3)	(4)	(5)	(6)	(7)	(8)	(9)	(10)	(11)
Frequency (MHz)	**Polarization H or V**	**V_{DIRECT} dB (μV)**	**V_{SITE} dB (μV)**	**ΔAF_{TOT} See Table 4 dB**	**Adjusted site attenuation dB**	**AF_{TX} dB (1/m)**	**AF_{RX} dB (1/m)**	**A_N (NSA) Measured dB**	**A_N (NSA) Theoretical dB**	**Deviation dB**
Note: (6)—(3)—(4)—(5) (9)—(6)—(7)—(8) (10) = See Table 1 through Table 3 (11)—(10)—(9)	REMARKS:									

Copyright © 2001 IEEE. All rights reserved.

Table A.2—Example of worksheet entries

Column	Entry
1	80 MHz frequency
2	Horizontal (polarization)
3	81.5 dB (μV) (assumed value) Receiver/spectrum analyzer reading with coaxial cables connected
4	67.5 dB (μV) (assumed value) Receiver/spectrum analyzer reading with receiver signal maximized by searching the height between 1 and 4 m
5	–1.0 dB (from Table 4)
6	15.0 dB [81.5–67.5 – (–) 1.0]
7	6.7 dB (1/m) assumed from calibration curve
8	6.5 dB (1/m) assumed from calibration curve
9	1.8 dB [15.0 – 6.7 – 6.5]
10	–0.7 dB (from Table 2)
11	–2.5 dB [–0.7 – (1.8)] (calculated deviation from model)
NOTE—The column 6 value of 15.0 dB is equivalent to the site attenuation for tunable resonant half-wave dipoles. The NSA removes the antenna factor and allows the comparison with the NSA for an ideal site. Column 11, hence, gives a deviation amplitude of 2.5 dB with respect to the ideal site attenuation.	

Copyright © 2001 IEEE. All rights reserved.

Annex B

(informative)

Site attenuation using swept frequencies

Swept frequency method measurements may be made using broadband antennas and a spectrum analyzer with a peak hold, maximum hold, storage capability, and a tracking generator. This method does not require the use of a worksheet because all comparisons are made with spectrum analyzer traces and separately constructed plots.

a) Adjust the output level of the tracking generator to give a received voltage display well above ambient and spectrum analyzer noise, but not so high as to overload the spectrum analyzer.

b) Raise the receiving antenna on the mast to the maximum height of the scan range as indicated in the appropriate Table 1, Table 2, or Table 3.

c) Set the spectrum analyzer to sweep the desired frequency range. Ensure that the spectrum analyzer is adjusted so that a similar signal up to 60 dB higher can be displayed on the same amplitude scale. This will accommodate the levels to be recorded in step e).

d) Slowly lower the receiving antenna to the minimum height of the scan range as indicated in the tables for the appropriate site geometry. Store or record the maximum received voltage display in decibels/microvolts. (The time it takes to lower the antenna should be much longer than the spectrum analyzer sweep time.)

e) Disconnect the transmit and receive cables from the antennas and connect directly together with a straight-through adapter. Store or record the resulting voltage display.

f) At each frequency, subtract the voltage measured in step d) from the voltage measured in step e). Also subtract the antenna factors for the transmit and receive antennas, AF_R and AF_T (dB/m), respectively. (Antenna factors as a continuous function of frequency can be obtained using the standard site method for calibrating antennas described in ANSI C63.5-1988 and ANSI C63.5-1998 or by using simple linear curve fitting on a set of discrete antenna factor values.) The result is the measured NSA over the range of frequencies used, which should be plotted. Also plot the theoretical NSA for an ideal site. If this process is carried out automatically in the analyzer, the accuracy of the analyzer to perform these calculations shall be confirmed.

 Copyright © 2001 IEEE. All rights reserved.

Annex C

(informative)

Site attenuation deviations

If the deviation exceeds the ±4 dB criterion, investigate as follows:

Start by checking the measurement system calibrations. If the signal generator and receiver/spectrum analyzer do not drift during the measurements, the prime suspects are the antenna factors. If these all check out, repeat the measurement.[10] If the differences are still greater than +4 dB, the site, the surrounding area, and the antenna and cabling placement are suspect. It is important to eliminate antenna feed cable problems by keeping the antenna cables perpendicular to the antenna for at least 1 m to the rear of the antenna. Ferrite beads may be used on the antenna feed cables, close to the antennas, to reduce any undesired common-mode antenna cable signals. The vertical site attenuation should in general be the most sensitive to site anomalies. If so, use that measurement as the basis for tracking the problem. Problems that may be found include inadequate reference groundplane construction and size, reflecting objects too close by (fences, buildings, light towers, etc.), degraded performance of all-weather enclosures because of inadequate construction techniques [such long-term problems as penetration of residue from airborne conductive contaminants (ANSI C63.6-1988 and ANSI C63.7-1992)]. Antenna balun defects, such as unbalance, are most obvious with vertical polarization. If results differ by more than 1.0 dB as a function of which end of a vertically polarized antenna is up, the balun should be checked. See ANSI C63.5-1988 and ANSI C63.5-1998 for further information.

NOTE—This information will be transferred to ANSI C63.7-1992 and deleted in the next revision.

[10]Consider adding the 10 dB pads indicated in the NOTE in 5.4.6.4 (third to last paragraph), especially if the antennas are suspected of having a relatively high-voltage standing wave ratio (VSWR).

Copyright © 2001 IEEE. All rights reserved.

Annex D

(informative)

Method of exploratory radiated emission maximization

The maximum radiated emission for a given mode of operation may be found during exploratory testing by using the following step-by-step procedure:

a) Monitor the frequency range of interest at a fixed antenna height and EUT azimuth.

b) If appropriate, manipulate the system cables to produce the highest amplitude signal relative to the limit. Note the amplitude and frequency of the suspect signal.

c) Rotate the EUT 360° to maximize the suspected highest amplitude signal. If the signal or another at a different frequency is observed to exceed the previously noted highest amplitude signal by 1 dB or more, go back to the azimuth and repeat step b). Otherwise, orient the EUT azimuth to repeat the highest amplitude observation and proceed.

d) Move the antenna over its fully allowed range of travel to maximize the suspected highest amplitude signal. If the signal or another at a different frequency is observed to exceed the previously noted highest amplitude signal by 1 dB or more, return to step b) with the antenna fixed at this height. Otherwise, move the antenna to the height that repeats the highest amplitude observation and proceed.

e) Change the polarity of the antenna and repeat step b), step c), and step d). Compare the resulting suspected highest amplitude signal with that found for the other polarity. Select and note the higher of the two signals. This signal is termed the highest observed signal with respect to the limit for this EUT operational mode.

f) The effects of various modes of operation shall be examined. One way to do this is to vary the equipment modes as step a) through step g) are being performed.

g) After completing step a) through step f), record the final EUT arrangement, mode of operation, and cable arrangement to use for the final radiated emission test in 8.3.1.2.

 Copyright © 2001 IEEE. All rights reserved.

Annex E

(informative)

Step-by-step guidance for testing personal computers and associated peripherals

The following procedure may be used as a guide for determining compliance of a personal computer or associated peripherals with certain regulatory requirements. The clause numbers refer to clauses or subclauses in this standard. This procedure may also be used as a guide for measuring other devices, as appropriate.

E.1 AC powerline conducted emission setup

a) The ac powerline conducted emission test facility shall conform to the requirements of 5.2–5.2.3 and 7.2–7.2.2. The measuring instruments, including the LISN, shall conform to the requirements in Clause 4.

b) The EUT shall be configured in accordance with Clause 6 through 6.2.3.3 and 11.1 through 11.2.4.

c) Use the type and length of interface cables specified in 6.1.4, and connect them to the interface ports on the EUT in accordance with 6.1.3. Interface cables shall be individually bundled as described in 6.1.4 and 11.2.4. The bundle should be secured with masking tape or any other nonconducting material that will not affect the measurements.

d) Connect the EUT to one LISN, and connect the peripheral or support equipment to a separate LISN as described in 7.2.1. AC power for all LISNs is to be obtained from the same ac source.

NOTE—As noted in 7.2.1, the monitor shall be powered by two separate sources as follows: a second LISN, and an ac receptacle provided on the back of the personal computer, if appropriate. When a personal computer is equipped with an ac receptacle on its back, two exploratory tests are needed to determine which equipment arrangement produces maximum emission levels.

If the EUT power cord is long enough to be bundled, the bundle should be secured with masking tape or any other nonconducting material that will not affect the measurements. Power cords of non-EUT equipment do not require bundling. Drape ac power cords of non-EUT equipment over the rear edge of the table and route them down onto the floor of the conducted emission test site to the second LISN. Power cords of peripheral equipment should not be draped over the top of an LISN.

E.2 AC powerline conducted emission measurements

a) Check the calibration of the measuring instrument using either an internal calibrator or a known signal level from an external signal generator.

b) A spectrum analyzer or other instrument providing a spectral display is recommended for exploratory conducted measurements. Connect the measuring instrument to the measuring port of a section of the LISN supplying current to one of the conductors in the EUT using a suitable length of coaxial cable. Terminate all other measuring ports on the LISNs in 50 Ω resistive. Set the 6 dB bandwidth of the measuring instrument to not less than 10 kHz and the detector function to the peak mode. Set the controls on the measuring instrument to enable viewing the entire frequency range for which limits are specified.

c) Activate the EUT and the measuring instrument to meet the requirements of 6.1.9.

Copyright © 2001 IEEE. All rights reserved.

d) Exercise the EUT as specified in 6.1 and 11.1. Accessory equipment connected to the EUT shall be exercised independently.

e) Follow the procedure in 7.2.3, and use the equipment arrangement in 11.2 to produce the emission that has the highest amplitude relative to the limit. The EUT may be turned off and on to determine which emissions originate from it.

f) Repeat step e) with the measuring instrument connected to the RF port of the other LISN section supplying the EUT with ac power.

g) Select the EUT arrangement and mode of operation that produced the highest emission relative to the limit for final ac powerline conducted emission measurement. If the EUT is moved to a final ac powerline conducted emission test site from an exploratory conducted emission test site, be sure to remaximize the highest emission according to 7.2.4. Set the bandwidth and the detector function of the instrument as specified in Clause 4. Follow the procedure in 11.5.2 to measure the final ac powerline conducted emissions from the EUT.

h) Repeat step g) with the measuring instrument connected to the measuring port of the other LISN section supplying the EUT with ac power (assuming there are two current-carrying conductors in the ac power cable for single-phase power sources).

NOTE—Measurements are to be made only on emanations available at the measuring ports of the LISNs connected to the EUT.

i) Record the EUT arrangement, mode of operation, and cable arrangement used for final ac powerline conducted emission measurements. This can be done with either diagrams or photographs.

j) Prepare the final test report data in accordance with Clause 10.

E.3 Radiated emission setup

a) Exploratory radiated emission measurements should generally follow procedures in Clause 8 and Clause 11. The measuring instruments shall conform to the requirements in Clause 4.
b) The EUT shall be placed on a turntable as specified in 5.4.4 and configured as in step b) and step c) of the E1 ac powerline conducted emission test setup.
c) Connect the power cords of the EUT and non-EUT equipment to the ac power source.

NOTE—The monitor shall be powered by two separate sources as follows: (1) an ac receptacle on the rotator surface, and (2) an ac receptacle provided on the back of the personal computer, if appropriate. When a personal computer is equipped with an ac receptacle on its back, two exploratory tests will be needed to determine which configuration produces maximum emission levels.

AC power cords of the EUT or non-EUT equipment do not require bundling. Drape all ac power cords of equipment tested on a tabletop over the rear edge of the table and route them down onto the turntable surface to the ac receptacle. Refer to Figure 11a.

E.4 Radiated emission measurements

a) Check the calibration of the measuring instrument using either an internal calibrator or a known signal level from an external signal generator.

b) A spectrum analyzer or other instrument providing a spectral display is recommended for exploratory radiated measurements. The frequency range may be scanned in segments or in its entirety depending on the rated frequency range of the measurement antenna [see NOTE under step e)] and the resolution and noise floor of the measuring instrument. Set the 6 dB bandwidth of the

 Copyright © 2001 IEEE. All rights reserved.

measuring instrument to 100 kHz or greater and the detector function to the peak mode. Set the display on the measuring instrument to enable viewing of emissions within the frequency range of the measuring antenna, (typically between 30 MHz and 230 MHz), using the scan width control of the analyzer. Adjust the sweep speed control so the analyzer display is calibrated. The video bandwidth shall be equal to or greater than the intermediate frequency bandwidth.

NOTE— If ambient radio or TV signals are of such magnitude or spacing that emissions from the EUT may be hidden, the scan width control can be set to 10 MHz per division or lower to identify EUT emissions. Use of a bandwidth less than 100 kHz may be helpful.

c) Activate the EUT and the measuring instrument to meet the requirements of 6.1.9.

d) Exercise the EUT as specified in 6.1 and 11.1. Equipment connected to the EUT shall be exercised independently.

e) Use a procedure such as the one contained in Annex D to maximize emissions from the EUT that are displayed on the analyzer and note the EUT arrangement as described in Clause 11, mode of operation, and cable positions that produce the highest emission relative to the limit.

NOTE—A broadband antenna is recommended for exploratory scanning of radiated emissions. It may be necessary to use multiple measurement antennas during this process to stay within the frequency range of each measurement antenna.

f) Tune the spectrum analyzer to the next segment of the frequency spectrum to be scanned, and repeat step c) through step g) until the frequency range of interest has been investigated.

g) Select the EUT arrangement, mode of operation, and interconnect cable positions from step e) that produced the highest emission relative to the limit for use in final radiated measurements. The final radiated emission test site shall conform to the requirements of 5.4 and 5.4.1. Set the bandwidth and the detector function of the instrument as specified in Clause 4.

h) It is recommended that the highest emission relative to the limit be remaximized according to 8.3.1.2 before performing final measurements, even if the EUT is not moved from an exploratory to a final radiated emission test site because slight variations in cable position can cause large variations in signal amplitude. Only slight variation in cable movements should be needed to remaximize the highest emission again.

NOTE—The same measurement antenna and distance should be used for remaximizing the highest signal relative to the limit at the final radiated emission test site.

i) Place the measurement antenna specified in 4.1.5 the distance from the EUT specified in the appropriate regulations.

j) Follow the procedure in 11.6.2 to measure radiated emissions from the EUT.

NOTE—It may be necessary to use multiple measurement antennas during this process to stay within the frequency range of each measurement antenna.

If regulations do not require radiated emission measurements above 1 GHz, proceed to step m). If radiated emission measurements above 1 GHz are required, an instrument capable of measuring both peak and average detector function signals shall be used. Set the bandwidth of this instrument to 1 MHz and the detector function to the peak mode. Measure emissions above 1 GHz from the EUT by following the procedures in 8.2.4 and 11.6.2.

k) If all of the emission levels above 1 GHz, as measured with the peak detector function, comply with the average limit specified by the appropriate regulations, proceed to step m). If any of these emission levels exceed the average limits but comply with the peak limits, proceed to step l).

Copyright © 2001 IEEE. All rights reserved.

l) Set the detector function of the measuring instrument to the average mode, using the procedures described in 8.2.4 and 11.6.2, and remeasure only those emissions from step k) that complied with the peak limits but exceeded the average limits.

m) Record the EUT arrangement, mode of operation, and cable positions used for final radiated emission measurements. This can be done with either diagrams or photographs.

n) Prepare the final test report data in accordance with Clause 10.

 Copyright © 2001 IEEE. All rights reserved.

Annex F

(informative)

Verification of LISN characteristics

The impedance and insertion loss of each LISN section is to be measured at least once a year using the following or an equivalent, procedure. The measurements are to be made at a sufficient number of frequencies to obtain a smooth curve of impedance or insertion loss with frequency. Measurements shall be made at the receptacle into which the EUT power cord is inserted.

F.1 Measuring the impedance of an LISN

a) This measurement is to be made with the LISN installed for use in testing a device.

b) To avoid possible introduction of ac power from the ac power supply into the measuring instrument, disconnect the power connections (both neutral and hot conductors) to the LISN at the supply side of the LISN. If an RF filter is used to eliminate high ambient conducted signals, it should remain connected to the LISN for these tests because the impedance of the RF filter can have an effect on the LISN impedance. If an RF filter is used, disconnect the power connections (both the hot and neutral conductors) to the LISN at the supply side of the RF filter.

c) Connect a 50 Ω termination on each port of the LISN.

d) The preferred instrument for measuring LISN impedance is a scalar network analyzer that can be tuned continuously over the frequency range of the test. A vector impedance meter or vector network analyzer may also be used. If an instrument that is not continuously tunable is used (such as an RF bridge that is capable only of measuring the impedance at a selected frequency), care should be exercised to make measurements at frequency intervals close enough together, particularly above 20 MHz so that any resonances can be detected.

   Using a suitable impedance adapter, connect the measuring instrument directly to one terminal of the ac receptacle on the load side of the LISN normally used to supply power to the EUT or peripheral. Measure the impedance to that side of the LISN ground, tuning the instrument over the frequency range to detect any impedance variations that may be from resonances or other imperfections. Place a 50 Ω termination at the measurement port of the LISN.

e) Plot the measured impedance curve for comparison with the tolerances shown on Figure 1. If any measured value exceeds the permissible error tolerance, the LISN shall be modified to reduce the error to an acceptable level.

f) Repeat step d) with the measuring instrument connected to the other terminal of the ac receptacle of the LISN.

g) If the LISN has more than two sections, repeat step d), step e), and step f) for all of the additional sections.

h) If the LISN inductors have magnetic materials in their construction, make additional measurements with ac current applied through the LISN to ensure that any variability caused by effects of ac power current can be detected. This can most easily be accomplished by shorting together the load terminals of the LISN and feeding current into the supply terminals of the LISN from a low-voltage transformer of suitable current rating. An ac ammeter in series with the circuit can be used to measure the applied current, and a variable transformer can be used to regulate the amount of current by varying the primary voltage of the transformer. The high-current circuit should not have a ground

Copyright © 2001 IEEE. All rights reserved.

connection. Note that the impedance values measured by this technique shall be approximately one-half of those observed in step e) and step g).

i) The above procedure is to be repeated for each LISN used for conducted measurements.

F.2 Measuring the insertion loss of an LISN

The following is the procedure for using a radio-noise meter (receiver) and a signal generator:

a) Set up the LISN, and test equipment as shown in Figure F.1a.

b) With the equipment connected as shown and a 50 Ω termination on the T-connector (A), measure the received signal voltage V_L in dB (μV) at the RF port (B).

c) Leaving the RF output of the signal generator unchanged, transfer the 50 Ω measuring termination to the RF port (B) and transfer the receiver input cable to the T-connector (A). Measure the drive signal voltage V_D in dB (μV).

d) Subtract V_L from V_D to obtain the insertion loss (in decibels) of the LISN.

The following is the procedure for using a network analyzer:

— Calibrate the network analyzer with the cables to be used in the measurements.

— Set up the LISN, and test equipment as shown in Figure F.1b.

— Subtract the signal level (in decibels) in the reference channel from the signal level (in decibels) in the test channel to obtain the insertion loss (in decibels) of the LISN.

NOTES

1—Attenuator pads are not used with the network analyzer because the impedances of the channels in the network analyzer are very nearly 50 Ω and any errors are corrected during calibration. Attenuator pads may be used if desired, but including them complicates the network analyzer calibration.

2—In this standard, when the term LISN is mentioned, it means an LISN set with two or more sections, as necessary.

 Copyright © 2001 IEEE. All rights reserved.

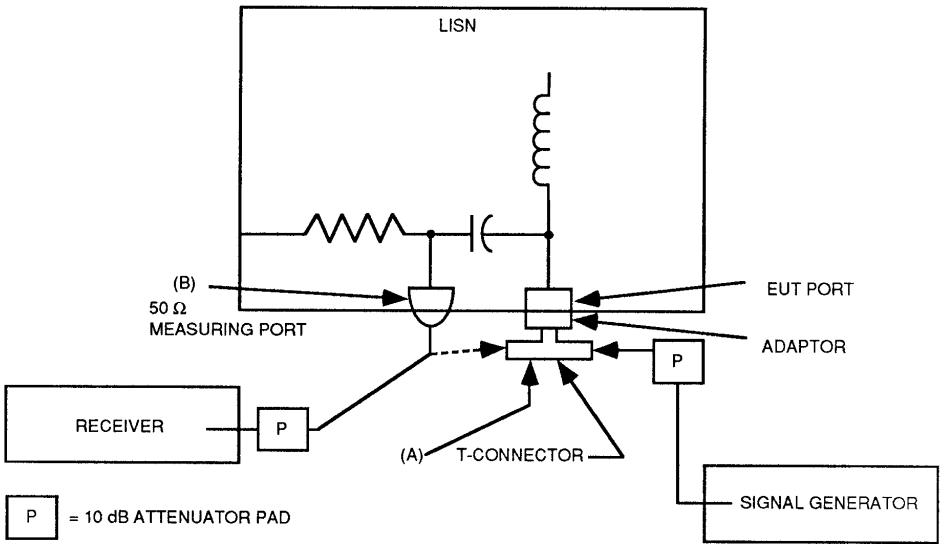

NOTE: If VSWR of receiver and signal generator is low, pads may not be needed or may be reduced to 6 dB or 3 dB.

(a) Method Using Receiver and Signal Generator

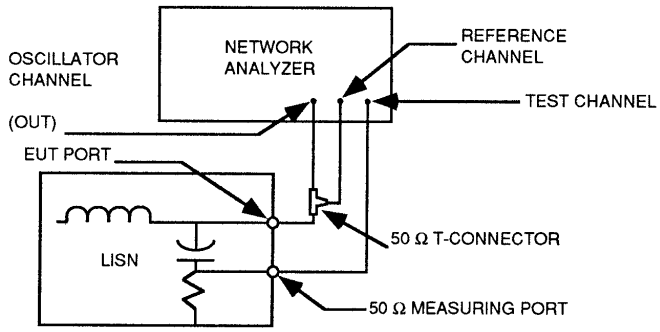

NOTE: Attenuator pads not used with network analyzer. Place T-connector as close to EUT port as possible. Use same length and type of cables between T-connector and reference channel input and 50 Ω measuring port and test channel input.

(b) Method Using Network Analyzer

Figure F.1—Measurement of LISN insertion loss

Copyright © 2001 IEEE. All rights reserved.

Annex G

(informative)

Absorbing clamp

The absorbing clamp has been developed and is recommended by the International Special Committee on Radio Interference (CISPR) for use in the 30 MHz to 300 MHz frequency range [CISPR Publication 16, (Part 1) paragraph 13]. The absorbing clamp measuring procedure is based on the assumption that at frequencies above 30 MHz, radio noise is radiated from the ac powerline connected to the EUT, and not from the EUT.

G.1 Description

With reference to Figure 14, the absorbing clamp uses ferrite rings or cores that surround the power cord and the shielded cable leading to the radio-noise meter to stabilize the impedance seen by the EUT at approximately 150 Ω in the frequency range from 30 to 300 MHz and to attenuate ambient noise originating on the power system. The current transformer uses similar ferrite cores or rings that are linked by a one-turn loop feeding the coaxial cable to the measuring instrument. The voltage read on the measuring instrument is proportional, at any frequency, to the RF current on the power cord at the location of the current transformer.

G.2 Calibration

a) The EUT in Figure 15 is replaced with a signal generator located just inside the wall of a screened room or behind a vertical conducting plane of at least 2.5 m by 2.5 m.

b) The signal generator is connected to a coaxial connector in the wall or conducting surface through a 10 dB pad. On the other side of the wall, a single cable is stretched outside the room from the center pin of the connector to replace the power cord in Figure 14.

c) The single cable shall be positioned in the center of the current transformer part of the clamp. It shall not be close to the slit between ferrite ring halves in the remainder of the clamp. The calibration procedures used shall be clearly identified. Where calibration curves (the manufacturer's or any other) are used, they shall be referenced or included with the results.

d) Adjust the position of the clamp along the cable for maximum received signal at each frequency. The calibration is determined by comparing the receiver indication with the output of the signal generator, while taking the attenuator into account.

 Copyright © 2001 IEEE. All rights reserved.

Annex H

(informative)

Step-by-step guidance for testing unintentional radiators other than ITE

The following procedures may be used as a guide for determining compliance with certain regulatory requirements of unintentional radiators that can be tested on an OATS. The clause numbers refer to clauses or subclauses in this standard.

H.1 AC powerline conducted emission measurements setup

a) The ac powerline conducted emission test site shall conform to the requirements of 5.2–5.2.3 and 7.2–7.2.2. The measuring instruments, including the LISN, shall conform to the requirements in Clause 4.

b) The EUT shall be configured in accordance with Clause 6 through 6.2.3.3 and 12.1 through 12.1.2 or 12.1 through 12.2.2, as appropriate. If the EUT uses a detachable antenna, ac powerline conducted measurements may be made with a suitable dummy load connected to the EUT antenna output terminals; otherwise, these tests shall be made with the antenna connected and, if adjustable, fully extended.

c) If the EUT is a receiver, it shall be supplied with the conditioning signal specified in 12.1.1.1 or 12.1.1.2, as applicable. The conditioning signal may be applied to the EUT by radiation or conduction on any convenient frequency specified in 12.1.1.

   If the EUT is a TV interface device, it shall be operated with typical signals applied, as specified in 12.2.1.1–12.2.1.4, as appropriate.

d) All input terminals or connectors on an unintentional radiator shall be terminated in the proper impedance. The output ports or connectors of a TV interface device shall be connected to either

   1) The cable provided with the device

   2) A cable of typical length

   This output cable shall be connected to either a terminating resistor of the proper impedance or the antenna transfer switch provided with the device. All other antenna transfer switch ports shall be terminated in the proper impedance.

   Support the cable in a straight horizontal line between the EUT and termination by placing it on a table. There should be at least a 75 cm clearance from any other conducting object.

e) Connect the EUT power cord to one LISN and connect the peripheral or support equipment power cords to a separate LISN, as described in 7.2.1. AC power for all LISNs is to be obtained from the same ac power source.

   If the EUT power cord is long enough to be bundled, the bundle should be secured with masking tape or any other nonconducting material that will not affect the measurements. Power cords of non-EUT equipment do not require bundling. Drape ac power cords of non-EUT equipment over the rear edge of the table and route them down onto the floor of the ac powerline conducted emission test site to the second LISN. Power cords of floor-standing accessory equipment may be

Copyright © 2001 IEEE. All rights reserved.

routed in any convenient fashion atop the reference groundplane or insulating material specified in 6.2.2.1. Power cords of peripheral equipment should not be draped over the top of an LISN. Refer to Figure 10a and Figure 10b for typical test setups.

H.2 AC powerline conducted emission measurements

a) Check the calibration of the measuring instrument using either an internal calibrator or a known signal level from an external signal generator.

b) A spectrum analyzer or other instrument providing a spectral display is recommended for exploratory ac powerline conducted emission measurements. Connect the measuring instrument to the measuring port of a section of the LISN supplying current to one of the conductors to the EUT using a suitable length of coaxial cable. Terminate all other measuring ports of the LISN(s) in 50 Ω resistive. Set the 6 dB bandwidth of the measuring instrument to not less than 10 kHz and the detector function to the peak mode. Set the controls on the measuring instrument to enable viewing the entire frequency range for which limits are specified.

c) Activate the EUT and the measuring instrument to meet the requirements of 6.1.9.

d) With the EUT operating on any convenient output channel or tuned to any one convenient frequency specified in 12.1.1, exercise the EUT as specified in step c) of the ac powerline conducted emission setup. Accessory equipment connected to the EUT shall be exercised individually.

NOTE—Some EUTs, especially receivers with synthesized tuners and remote controls, may have more oscillators than the one used for frequency conversion in the RF input circuitry. These may cause emissions not normally found in simpler types of EUTs.

e) Use the procedure in 7.2.3 while applying the appropriate modulating signal to the EUT to determine the arrangement of the EUT system that produces the emission with the highest amplitude relative to the limit. The EUT may be turned off and on to determine which emissions emanate from it.

NOTE— In the case of a TV interface device capable of operation with external video input, make one set of tests with the VITS signal at 1 V, and a second with it at 5 V.

f) Repeat step e) with the measuring instrument connected to the measuring port of the other LISN section supplying the EUT with ac power.

NOTE—Measurements are to be made only on emanations available at the measuring ports of the LISNs connected to the EUT.

g) Select the EUT arrangement and mode of operation that produced the highest emission relative to the limit for final ac powerline conducted emission measurements. If the EUT is moved to a final ac powerline conducted emission test site from an exploratory conducted emission test site, remaximize the highest emission according to 7.2.4. Set the bandwidth and the detector function of the instrument as specified by the procuring or regulatory agency. Follow the procedure in 12.1.3.2 or 12.2.3.2 as appropriate to measure the final ac powerline conducted emissions from the EUT.

h) Repeat step g) with the measuring equipment connected to the RF port of the other LISN section supplying the EUT with ac power.

i) Record the EUT arrangement, mode of operation, and interconnect cable or wire positions used for final ac powerline conducted emission measurements. This can be done with either diagrams or photographs.

j) Prepare the final test report data in accordance with Clause 10.

 Copyright © 2001 IEEE. All rights reserved.

H.3 Radiated emission measurements setup

a) Exploratory radiated measurements should generally follow procedures in Clause 8 and Clause 12. The measuring instruments shall conform to the requirements in Clause 4.

b) The EUT shall be placed on a turntable specified in 5.4.4 and configured as in step b), step c), and step d) of H.1. All resistive terminations in place in step b), step c), and step d) of H.1 shall remain in place during radiated emission measurements.

c) If operated from ac power, connect the power cord of the EUT (and of any accessory equipment) to the ac power source receptacle located on the turntable. If battery operated, begin the tests with a new or a fully charged battery installed in the EUT.

   AC power cords of the EUT and accessories do not require bundling. Drape all ac power cords of equipment tested on a tabletop over the rear edge of the table and route them down onto the turntable surface to the ac receptacle. AC power cords of floor-standing equipment may be routed in any convenient fashion. Refer to Figure 11a and Figure 11b.

   If the EUT is provided only with an adjustable permanently attached antenna, it shall be tested with this antenna extended to its maximum length. If the EUT is provided with terminals for connection of an external antenna, connect the antenna normally used with the EUT to these terminals, and position it in a typical location or orientation.

   NOTE—In the case of a receiver (or tuner) that is tested for radiated emission measurements with a resistive termination rather than an antenna connected to the antenna input terminals, measurement of the RF power available at the antenna input terminals is also required. See H.5.

d) If the EUT is a receiver, it shall be supplied with the conditioning or stabilizing signal specified in 12.1.1.1 or 12.1.1.2, as applicable, by radiation or conduction. The conditioning signal may be applied to the EUT by radiation or conduction on any frequency within the range of the EUT.

   If the EUT is a TV interface device, it shall be operated with typical signals applied as specified in 12.2.1.1, 12.2.1.2, 12.2.1.3, or 12.2.1.4, whichever is applicable.

H.4 Radiated emission measurements

a) Check the calibration of the measuring instrument using either an internal calibrator or a known signal level from an external signal generator.

b) A spectrum analyzer or other instrument providing a spectral display is recommended for exploratory radiated measurements. The frequency range may be scanned in segments or in its entirety, depending on the rated frequency range of the measurement antenna (see NOTE under step e) below), and the resolution and noise floor of the measuring instrument. Set the 6 dB bandwidth of the measuring instrument to 100 kHz or greater and the detector function to the peak mode. Set the display on the measuring instrument to enable viewing of emissions within the frequency range of the antenna (typically between 30 MHz and 230 MHz or 200 to 1000 MHz) by setting the scan width control on the analyzer. Adjust the sweep speed control so the analyzer display is calibrated. The video bandwidth shall be greater than the IF bandwidth.

   NOTE—If ambient radio or TV signals are of such magnitude or spacing that emissions from the EUT may be hidden, the scan width control can be set to 10 MHz per division or less to identify EUT emissions. Use of bandwidth less than 100 kHz may be helpful.

Copyright © 2001 IEEE. All rights reserved.

c) Activate the EUT and the measuring instrument to meet the requirements of 6.1.9. If the EUT is a receiver that tunes over a range of frequencies, set it to one of the number of frequencies specified in 12.1.1. If the EUT is a TV interface device, set it to one of the output channels.

d) Exercise the EUT as specified in 12.1.1 or 12.1.2, as appropriate. Accessories connected to the EUT shall be exercised independently.

NOTE—Some EUTs, especially receivers with synthesized tuners and remote controls, may have more oscillators than the one used for frequency conversion in the RF input circuitry. These may cause emissions not normally found in simpler types of EUTs.

e) Use a procedure such as that contained in Annex D in conjunction with the procedure in 12.1.4.1 or 12.2.4.1, as appropriate, to maximize emissions from the EUT and note the EUT attitude, arrangement, operating mode, operating frequency, and interconnect cable or wire positions that produce the highest emission relative to the limit. In addition, exploratory radiated emission testing of hand-held or body-worn devices shall include rotation of the EUT through three orthogonal axes to determine the attitude that produces the highest emission relative to the limit.

NOTE—A broadband antenna is recommended for exploratory scanning of radiated emissions. It may be necessary to use multiple measurement antennas during this process to stay within the frequency range of each measurement antenna.

f) Tune the spectrum analyzer to the next segment of the frequency spectrum to be scanned and repeat step c) through step g) until the frequency range of interest has been investigated.

g) Where the procuring or regulatory agency require radiated measurements with the EUT operating on more than one output channel or tuned to more than one frequency, repeat step c) through step g), for each additional output channel or frequency.

h) Select the EUT attitude, arrangement, operating mode, output channel or operating frequency, and interconnect cable or wire positions from step e) that produced the highest emission relative to the limit to use for final radiated measurements. The final radiated emission test site shall conform to the requirements of 5.4–5.4.2.1. Set the measurement and the detector function as specified by the procuring or regulatory agency.

i) It is recommended that the highest emission relative to the limit be remaximized according to 8.3.1.2 before performing final measurements, even if the EUT is not moved from a exploratory to a final radiated emission test site because slight variations in cable or wire positions can cause large variations in signal amplitude. Only slight variation in cable movements should be needed to remaximize the highest emission again.

NOTE—The same measurement antenna and distance should be used for remaximizing the highest emission relative to the limit at the final radiated emission test site.

j) Place the measurement antenna specified in 4.1.5 at the distance from the EUT specified in the appropriate regulations.

k) Follow the procedure in 8.3.1.2 and 12.1.4.2 or 12.2.4.2, as appropriate, to measure final radiated emission from the EUT.

NOTES

1—It may be necessary to use multiple measurement antennas during this process to stay within the frequency range of each measurement antenna.

2—In the case of an EUT that radiates pulsed emission (e.g., a superregenerative receiver), depending on the pulse length, repetition rate, and duty cycle of the emission, “desensitization” may cause the indications of the measuring equipment to be much less than the true peak value of the emission. Refer to the measuring

 Copyright © 2001 IEEE. All rights reserved.

instrument instruction manual or an application note from the manufacturer of the equipment for the appropriate correction factor to be applied to the indicated value to obtain an accurate value for the test report.

If regulations do not require radiated measurements above 1 GHz, proceed to step n).

If radiated measurements above 1 GHz are required, an instrument capable of measuring both peak and average detector function signals shall be used. Set the bandwidth of this instrument to 1 MHz and the detector function to the peak mode. Measure final radiated emission above 1 GHz from the EUT by following the procedures in 8.2.4 and 12.1.4.2 or 12.2.4.2, as appropriate.

l) If all of the emission levels above 1 GHz as measured with the peak detector function comply with the average limit specified by the appropriate regulations, proceed to step n). If any of these emission levels exceed the average limits but comply with the peak limits, proceed to step m).

m) Set the detector function of the measuring instrument to the average mode, and using the procedures described in 8.2.4 and 12.1.4.2 or 12.2.4.2, as appropriate, remeasure only those emissions from step l) that complied with the peak limits but exceeded the average limits.

NOTE—As indicated in NOTE 2 under step k), the measuring instrument may not be capable of indicating a true average value of pulsed emission. The average value can in such cases be calculated from the peak value, taking into account the ratio between the pulse duration (at the 50% amplitude level) and the length of time between pulses.

n) Record the EUT arrangement, operating mode, operating frequency, and cable or wire positions used for final radiated emission measurements. This can be done with either diagrams or photographs.

o) Prepare the final test report data in accordance with Clause 10.

H.5 Antenna-conducted power measurements for receivers

NOTE—These measurements are required only for receivers that were tested for radiated emission with a terminating resistor instead of an antenna connected to the antenna input terminals.

a) Check the calibration of the measuring instrument using either an internal calibrator or a known signal from an external signal generator.

b) The frequency range may be scanned in segments or in its entirety, depending on the measuring instrument. Set the 6 dB bandwidth of the measuring instrument to 100 kHz, and set the detector function to the peak mode. Set the display on the measuring instrument to enable viewing of emission between 30 MHz and 230 MHz by setting the scan width control on the analyzer to 20 MHz per division. Adjust the sweep speed control so the analyzer display is calibrated. Video filtering is not used during these measurements.

NOTE—Where the procuring or regulatory agency specifies limits using quasi-peak detection, if the peak measured value meets the quasi-peak limit, it is unnecessary to perform a quasi-peak measurement.

c) Position the EUT as specified in 6.2. Connect the measuring equipment to the antenna input terminals of the EUT, using a balun or other impedance-matching device if necessary.

NOTE—If the EUT is part of a transceiver, it is advisable to disable the switch that enables the transmitter to protect the measuring instrument.

d) Activate the EUT and the measuring instrument to meet the requirements of 6.1.9. Tune the EUT to one of the number of frequencies specified in 12.1.1, and exercise it as specified in 12.1.1.1. Accessories connected to the EUT shall be exercised independently.

Copyright © 2001 IEEE. All rights reserved.

NOTE—Some EUTs, especially receivers with synthesized tuners and remote controls, may have more oscillators than the one used for frequency conversion in the RF input circuitry. These may cause emissions not normally found in simpler types of EUTs.

e) While applying the appropriate modulating signals individually, scan the specified range of measurements and record the level of the six highest emissions relative to the limit below 1 GHz.

NOTE—A peak voltage of 316 μV or less into 50 Ω complies with the FCC regulations for receivers operating in the range of 30 to 960 MHz.

If all observed peak values are less than the limit for the quasi-peak value of antenna-conducted emissions stated in the regulations, proceed to step g). If any of these emissions exceed the quasi-peak limit, proceed to step f).

f) Set the bandwidth and the detector function, as specified by the procuring or regulatory agency, and remeasure only those emissions measured in step e) that in the peak detector mode exceeded the quasi-peak limit.

g) If regulations do not require antenna-conducted power measurements above 1 GHz, proceed to step j).

If antenna-conducted power measurements above 1 GHz are required, an instrument capable of measuring both peak and average detector function signals shall be used. Set the bandwidth of this instrument to 1 MHz and the detector function to the peak mode. Measure the emissions above 1 GHz from the EUT by following the above procedure.

h) If all of the emission levels above 1 GHz as measured with the peak detector function comply with the average limit specified by the appropriate regulations, proceed to step j). If any of these emission levels exceeds the average limit but complies with the peak limit, proceed to step j).

i) Set the detector function of the measuring instrument to the average mode, and remeasure only those emissions measured in step h) that in the peak detector mode exceeded the average value limits.

j) Where 12.1.1 requires measurement with the EUT tuned to more than one frequency for testing, repeat step d) through step j) for each additional output channel or frequency.

k) Prepare the final test report in accordance with Clause 10.

H.6 TV interface device output and spurious level measurements

NOTE—H.6 applies only to devices in which these measurements are required by the procuring or regulatory agency.

a) Check the calibration of the measuring instrument using either an internal calibrator or a known signal from an external signal generator.

b) A spectrum analyzer or other instrument providing a spectral display is recommended for exploratory measurements. Video filtering is not used during these tests.

For measurements in the range 30 to 1000 MHz, set the bandwidth of the measuring instrument to 100 kHz and the detector function to the peak mode. The frequency range may be scanned in segments or in its entirety, adjusting the sweep speed control so that the display is calibrated.

It is recommended that RG-214 for 50 Ω systems or other appropriate double-shielded coaxial cable be used for all connections to measuring equipment, keeping lengths as short as practicable. See NOTE in H.7.

 Copyright © 2001 IEEE. All rights reserved.

c) Configure the EUT as specified in 6.2 and 12.2.2. Remove the termination connected to the end of the EUT output cable, and connect the output cable to the measuring instrument, using an impedance-matching device or balun, as appropriate.

d) Energize the EUT, and set it to one of its output channels.

e) If the EUT

1) Operates only from internal video signals, it shall be tested with these in normal operation. A VCR shall be tested in the record and play modes using a standard TV signal as the modulating signal. Measure the signal level at the visual and aural carrier frequencies. Also measure any emissions in the range from 30 MHz to 4.6 MHz below the visual carrier frequency, and any emissions in the range from 7.4 MHz above the visual carrier frequency to 1 GHz.

2) Also operates from externally generated video signal(s), it shall be tested with modulation as follows:

i) With the internal signals described in step e), item l)

ii) External VITS signal at 1 V peak to peak

iii) External VITS signal at 5 V peak to peak.

Measure the signal level at the visual and aural carrier frequencies. Also measure any emissions in the range from 30 MHz to 4.6 MHz below the visual carrier frequency, and any emissions in the range from 7.4 MHz above the visual carrier frequency to 1 GHz.

4) Is a CSTD, it shall be supplied with input RF signal from a typical broadband cable TV source set at a level of 25 dB (mV). Measure the signal level at the visual and aural carrier frequencies of the output channel. Also measure any emissions in the range from 30 MHz to 4.6 MHz below the visual carrier frequency, and any emissions in the range from 7.4 MHz above the visual carrier frequency to 1 GHz.

f) Repeat step e1), step e2), or step e3), as appropriate, for any other available output channel(s) on the EUT.

g) Prepare the final test report in accordance with Clause 10.

H.7 Cable TV antenna transfer switch measurements

NOTE—This subclause applies only to devices in which these measurements are required by the procuring or regulatory agency.

When required by the procuring or regulatory agency, the following procedure may be used to determine the isolation of a cable TV antenna transfer switch that is either built into a device or is a stand-alone, external switch.

a) Check the calibration of the measuring instrument using either an internal calibrator or a known signal from an external signal generator.

b) A measuring instrument with a peak detector function shall be used. A standard signal generator with calibrated output shall be used to provide the test signal.

Depending on the noise figure of the measuring instrument, a low-noise, broadband amplifier may be needed to perform these measurements.

Copyright © 2001 IEEE. All rights reserved.

c) Position the device containing the isolation switch as described in 6.2, or place the isolation switch on a nonconducting table 80 cm in height. Connect a suitable resistive termination to the output terminals of the device or switch.

d) Connect a signal generator to the port that is used for cable TV input to the device or switch using any convenient length of connecting cable with an impedance-matching device as required to match the rated input impedance of the terminal. It is recommended that a pad with at least 6 dB attenuation be placed as near as possible to the terminal to minimize any residual mismatch effects.

NOTE—Type RG-214 for 50 Ω systems or other appropriate double-shielded coaxial cable should be used for all connections, and they should be as short as practical.

e) Connect the measuring instrument to an antenna terminal of the device or switch, with an impedance-matching device if required to match the rated input impedance of the terminal. It is recommended that a pad with at least 6 dB of attenuation be placed as near as possible to the terminal to minimize any residual mismatch effects. If the device or switch has more than two antenna input terminals, connect a suitable termination to any unused ones.

f) With an unmodulated input signal of 0 dBm applied at 54 MHz from the signal generator to the device or switch cable TV input terminal, measure the signal at 54 MHz available at the terminal connected to the measuring instrument, sequentially using all positions of the antenna selector switch. If the device is electrically operated, also measure the signal with power off. Record the signal level for each switch position, including the value observed with the device power off (if applicable).

g) Disconnect the signal generator and measuring instrument from the device or switch, and connect the signal generator to the measuring instrument using the cables and impedance-matching devices (and pads, if used) formerly connected to the device or antenna transfer switch.

NOTE—In the event that the original matching devices are not appropriate for this connection (e.g., if the device or antenna transfer switch have different input and output impedances), change the impedance-matching devices as necessary for proper impedance match.

If the device or switch has input terminals for nominal 300 Ω antenna twin-lead and the output terminals are coaxial, it is desirable to delete the baluns that were required for proper connection to the measuring instrument in step f) or step g).

h) With the measuring instrument and signal generator set to 54 MHz as above, reduce the signal generator output to obtain the same levels as previously recorded in step f) and step g) for each position of the antenna transfer switch, including with power off (if applicable). The difference in the signal generator output level in this measurement compared with that applied in step g) is the attenuation of the switch at 54 MHz. Record the difference in decibels.

NOTE—If impedance-matching devices or baluns were changed in the transition from step f) and step g) to step h) and step i), the apparent attenuation level measured in step h) and step i) shall be corrected to account for any differences in attenuation caused by the changes of these devices.

i) Repeat step f), step g), and step h) with applied signal at 150, 200, 250, 300, 350, 400, 450, 500, and 550 MHz.

j) If the device or switch has more than two input terminals, repeat step d) through step i) with the signal generator connected to the third, fourth, and so on, terminals.

k) Prepare the final test report in accordance with Clause 10.

 Copyright © 2001 IEEE. All rights reserved.

H.8 TV interface device antenna transfer switch measurements

NOTE—Clause H.8 applies only to devices in which these measurements are required by the procuring or regulatory agency.

a) Check the calibration of the measuring instrument using either an internal calibrator or a known signal from an external signal generator.

b) A spectrum analyzer or other instrument providing a spectral display is recommended for these measurements. Video filtering is not used during these tests.

Set the bandwidth of the measuring instrument to 100 kHz and the detector function to the peak mode.

Type RG-233, and RG-55, or an other double-shielded coaxial cable should be used, with connections kept as short as practical.

Depending on the noise figure of the measuring instrument, a low-noise broadband amplifier may be needed to enable these measurements.

H.8.1 Switches with coaxial input ports

a) Position the device as specified in 6.2. Place an external antenna transfer switch on a table 80 cm in height above ground. The output port of a TV interface device shall be connected to either

   1) The cable provided with the device
   2) A cable of typical length

   This output cable shall be connected to either a terminating resistor of the proper impedance or the antenna transfer switch provided with the device. The output terminal of the antenna transfer switch shall be terminated in the proper impedance.

   NOTE—If the device has a coaxial output port, connect a resistive termination of the proper impedance directly to it.

   Keep the output cable and antenna transfer switch at least 75 cm away from any conducting object by placing it on a table.

b) If the device

   1) Operates only from internal video signals (e.g., a TV game or VCR), it shall be tested with these in normal operation (using a video tape with a typical TV signal recorded on it for the signal source, if necessary)
   2) Also operates from externally generated video signals, it shall be tested with modulation as follows:
      i) With the internal signals
      ii) External VITS signal at 1 V peak to peak
      iii) External VITS signal at 5 V peak to peak
   3) Is a CSTD, adjust it for operation from cable TV input [two cable TV input signal levels shall be supplied alternately, first 0 dB (mV), and then 25 dB (mV)]

c) Using as short a length of coaxial cable as possible, connect the antenna-input port to the measuring instrument, with an impedance-matching device if necessary. If the device or switch has more than one antenna input port, terminate any unused ones with a suitable resistive termination.

   Set the device to one of the channels on which it operates, energize it, and adjust it for operation from internally generated signals.

Copyright © 2001 IEEE. All rights reserved.

d) Measure the frequency and level of the video carrier on which the TV interface device is operating for each position of the antenna transfer switch. If the TV interface device and the antenna transfer switch operate from ac power, repeat this measurement with the ac power turned off. Change the TV interface device output channel, and repeat the above two measurements for each output channel available on the TV interface device.

NOTE—Corrections should be applied to account for differences of losses in matching devices and cables.

e) Repeat step b), step c), and step d) for any other pair of antenna input ports provided on the device or switch.

f) Prepare the final test report in accordance with Clause 10.

H.8.2 Switches with balanced transmission line connectors

a) Position the device as specified in 6.2. Place an external antenna transfer switch on a table 80 cm in height above ground. The output port of a TV interface device shall be connected to either

1) The cable provided with the device

2) A cable of typical length

This output cable shall be connected to either a terminating resistor of the proper impedance or the antenna transfer switch provided with the device. The output terminal of the antenna transfer switch shall be terminated in the proper impedance.

Keep the output cable and antenna transfer switch at least 75 cm away from any conducting object by placing it on a table.

b) If the device

1) Operates only from internal video signals (e.g., a TV game or VCR), it shall be tested with these in normal operation (using a video tape with a typical TV signal recorded on it for the signal source, if necessary)

2) Also operates from externally-generated video signals, it shall be tested with modulation as follows:

i) With the internal signals

ii) External VITS signal at 1 V peak to peak

iii) External VITS signal at 5 V peak to peak

3) Is a CSTD, adjust it for operation from cable input and supply it with a cable TV signal at a level of 25 dB (mV)

c) Set the device to one of the available output channels. Connect a length of 300 Ω twin-lead three-quarters of a wavelength long at the device output channel frequency to the input terminals on the device or switch, and connect the measuring instrument to the other end of this line, using a balun for impedance matching. Support this twin-lead in a horizontal straight line from the device or switch to the measuring instrument, keeping it at least 75 cm from any other conducting objects.

1) If the device or switch has more than one set of antenna input terminals, terminate the others.

2) Energize the device, and adjust it for operation from internally generated signals.

 Copyright © 2001 IEEE. All rights reserved.

d) Measure the frequency and level of the video carrier on which the TV interface device is operating for each position of the antenna transfer switch. If the TV interface device and the antenna transfer switch operate from ac power, repeat this measurement with the ac power turned off and externally generated signals applied as specified above. Change the TV interface device output channel and repeat the above two measurements for each output channel available on the TV interface device.

NOTE—Corrections should be applied to account for differences of losses in matching devices and cables.

e) Next, reduce the length of the twin-lead in two steps of one-third of the original length, and repeat step d) (this results in one set of measurements each at three-quarter, one-half, and one-quarter wavelength).

f) Repeat step b) through step e) for any other pair of antenna input ports provided on the device or switch, with the device both energized and de-energized.

g) Repeat step c) through step g) for each available output channel on the device.

h) Prepare the final test report in accordance with Clause 10.

Copyright © 2001 IEEE. All rights reserved.

Annex I

(informative)

Step-by-step guidance for testing intentional radiators

The following procedure may be used as a guide for determining compliance of intentional radiators operating on frequencies above 30 MHz that can be tested on an OATS with certain regulatory requirements. The clause numbers refer to clauses or subclauses in this standard.

I.1 AC powerline conducted emission measurements setup

NOTE—I.1 applies only to EUTs that operate on power from public utility powerlines.

a) The ac powerline conducted emission test site shall conform to the requirements of 5.2–5.2.3 and 7.2–7.2.2. The measuring instruments, including the LISN, shall conform to the requirements in Clause 4.

b) The EUT shall be configured in accordance with Clause 6–6.2.3.3 and Clause 13–13.1.2. If the EUT uses a detachable antenna, ac powerline conducted measurements shall be made with a suitable dummy load connected to the EUT antenna output terminals; otherwise, these tests shall be made with the antenna connected and, if adjustable, fully extended.

c) Use the type and length of interface cables specified in 6.1.4, and connect them to the interface ports on the EUT in accordance with 6.1.3. Interface cables shall be individually bundled as described in 6.1.4. The bundle should be secured with masking tape or any other nonconducting material that will not affect the measurements.

d) Connect the EUT power cord to one LISN, and connect the peripheral or support equipment power cords to a separate LISN as described in 7.2.1. AC power for all LISNs is to be obtained from the same 1 power source.

   If the EUT power cord is long enough to be bundled, the bundle should be secured with masking tape or any other nonconducting material that will not affect the measurements. Power cords of non-EUT equipment do not require bundling. Drape ac power cords of non-EUT equipment over the rear edge of the table, and route them down onto the floor of the ac powerline conducted emission test site to the second LISN. Power cords of floor-standing accessory equipment may be routed in any convenient fashion atop the reference groundplane or insulating material specified in 6.2.2.1. Power cords of peripheral equipment should not be draped over the top of an LISN. Refer to Figure 10a or Figure 10b for typical test setups.

e) The EUT shall be supplied with the appropriate modulation specified in 13.1.1.1. If the EUT transmits only pulsed modulation and has coding switches, these shall be set to the position that produces the maximum duty cycle during measurements.

I.2 AC powerline conducted emission measurements

a) Check the calibration of the measuring instrument using either an internal calibrator or a known signal level from an external signal generator.

b) A spectrum analyzer or other instrument providing a spectral display is recommended for exploratory ac powerline conducted emission measurements. Connect the measuring instrument to the RF port of a section of the LISN supplying current to the EUT using a suitable length of coaxial cable. Terminate all other RF ports of the LISN(s) in 50 Ω resistive. Set the 6 dB bandwidth of the

 Copyright © 2001 IEEE. All rights reserved.

measuring instrument to not less than 10 kHz and the detector function to the peak mode. Set the controls on the measuring instrument to enable viewing the entire frequency range for which limits are specified.

c) Activate the EUT and the measuring instrument to meet the requirements of 6.1.9. The EUT should be set to transmit on any one convenient frequency in its rated range.

d) Exercise the EUT in all modes of operation as specified in 13.1.1.1. Accessory equipment connected to the EUT shall be exercised individually.

e) Use the procedure in 7.2.3, while applying the appropriate modulating signal to the EUT, to determine the arrangement of the EUT system that produces the emission with the highest amplitude relative to the limit. The EUT may be turned off and on to determine which emissions emanate from it.

f) Repeat step e) with the measuring instrument connected to the RF port of the other LISN section supplying the EUT with ac power.

NOTE—Measurements are to be made only on emanations available at the RF ports of the LISNs connected to the EUT.

g) Select the EUT arrangement and mode of operation that produced the highest emission relative to the limit for final ac powerline conducted emission measurements. If the EUT is moved to a final ac powerline conducted emission test site from an exploratory conducted emission test site, be sure to re-maximize the highest emission according to 7.2.4. Set the bandwidth and the detector function of the instrument as specified by the procuring or regulatory agency. Follow the procedure in 13.1.3.2 to measure the final ac powerline conducted emission from the EUT.

h) Repeat step g) with the measuring equipment connected to the RF port of the other LISN section supplying the EUT with ac power.

i) Record the EUT arrangement, mode of operation, and interconnect cable or wire positions used for final ac powerline conducted emission measurements. This can be done with either diagrams or photographs.

j) Prepare the final test report data in accordance with Clause 10.

I.3 Radiated emission measurements setup

a) Exploratory radiated emission measurements should generally follow procedures in Clause 8 and Clause 13. The measuring instruments shall conform to the requirements in Clause 4.

b) The EUT shall be positioned on a turntable as specified in Clause 4 and configured as in step b) and step c) of I.1.

c) If operated from ac power, connect the power cord of the EUT (and of any accessory equipment) to the ac power source receptacle located on the turntable. If battery operated, begin the tests with a new or a fully charged battery installed in the EUT.

The ac power cords of the EUT and accessories do not require bundling. Drape all ac power cords of equipment tested on a tabletop over the rear edge of the table and route them down onto the turntable surface to the ac receptacle. AC power cords of floor-standing equipment may be routed in any convenient fashion. Refer to Figure 11a and Figure 11b.

d) If the EUT is provided only with an adjustable permanently attached antenna, it shall be tested with this antenna extended to its maximum length. If the EUT is provided with terminals for connection of an external antenna, connect the antenna normally used with the EUT to these terminals, and position it in a typical location or orientation.

Copyright © 2001 IEEE. All rights reserved.

e) The EUT shall be supplied with modulation as specified in 13.1.1.1. If the EUT transmits only pulsed modulation and has coding switches, these shall be set to the position that produces the maximum duty cycle during measurements.

I.4 Radiated emission measurements

a) Check the calibration of the measuring instrument using either an internal calibrator or a known signal level from an external signal generator.

b) A spectrum analyzer or other instrument providing a spectral display is recommended for exploratory radiated measurements. The frequency range may be scanned in segments or in its entirety depending on the rated frequency range of the measurement antenna [see NOTE under step e) below], and the resolution and noise floor of the measuring instrument. Set the 6 dB bandwidth of the measuring instrument to 100 kHz or greater and the detector function to the peak mode. Set the display on the measuring instrument to enable viewing of emissions within the frequency range of the measuring antenna (typically between 30 MHz and 230 MHz or 200 to 1000 MHz), using the scan width control on the analyzer. Adjust the sweep speed control so the analyzer display is calibrated. The video bandwidth shall be greater than the IF bandwidth.

NOTES

1—If ambient radio or TV signals are of such magnitude or spacing that emission from the EUT may be hidden, the scan width control can be set to 10 MHz per division or less to identify EUT emission. Use of a bandwidth less than 100 kHz may be helpful.

2—The bandwidth of the measuring instrument shall be wider than the pulse repetition frequency of the transmitted signal to measure its maximum peak level. See ANSI C63.22 for guidelines on selecting bandwidth and determining pulse desensitization factors, as necessary.

c) Activate the EUT and the measuring instrument to meet the requirements of 6.1.9. If the EUT operates over a range of frequencies, set it to one of the number of frequencies specified in 13.1.1.

NOTE—These exploratory tests shall be run with the EUT powered in turn from both ac and dc (battery) power, if the device has these capabilities, to determine which power source produces the highest emission relative to the limit.

d) Exercise the EUT as specified in 13.1.1.1. Accessories connected to the EUT shall be exercised independently.

e) Use a procedure such as that contained in Annex D in conjunction with the procedure in 13.1.4.1 to maximize emission from the EUT and note the EUT attitude, arrangement, operating mode, and interconnect cable or wire positions that produce the highest emission relative to the limit. In addition, exploratory radiated emission testing of hand-held or body-worn devices shall include rotation of the EUT through three orthogonal axes to determine the attitude that produces the highest emission relative to the limit.

NOTE—A broadband antenna is recommended for exploratory scanning of radiated emission. It shall be necessary to change to other measurement antennas during this process to cover the complete frequency range of the test.

f) Tune the spectrum analyzer to the next segment of the frequency spectrum to be scanned, and repeat step c), step d) and step e) until the frequency range of interest has been investigated.

Where the procuring or regulatory agency require radiated measurements with the EUT tuned to more than one frequency, repeat step c), step d) and step e) for each additional frequency.

g) Select the EUT arrangement, operating mode, and interconnect cable or wire positions from step e) that produced the highest emission relative to the limit to use for final radiated measurements. The

 Copyright © 2001 IEEE. All rights reserved.

final radiated emission test site shall conform to the requirements of 5.4–5.4.2. Set the bandwidth and the detector function as specified by the procuring or regulatory agency.

h) It is recommended that the highest emission relative to the limit be remaximized per 8.3.1.2 before performing final measurements, even if the EUT is not moved from a exploratory to a final radiated emission test site, because slight variations in cable or wire positions can cause large variations in signal amplitude. Only slight variation in cable movements should be needed to remaximize the highest emission again.

NOTE—The same measurement antenna and distance should be used for remaximizing the highest emission relative to the limit at the final radiated emission test site.

i) Place the measurement antenna specified in 4.1.5 the distance from the EUT specified in the appropriate regulations.

j) Follow the procedure in 8.3.1.2 and 13.1.4.2 to measure final radiated emission from the EUT on the number of frequencies specified in 13.1.1.

NOTE—It may be necessary to use multiple measurement antennas during this process to cover the complete frequency range of the test.

When average detector function limits are specified for a pulse-modulated transmitter, the average level of emission may be found by measuring the peak level of the emissions and correcting them with the duty cycle as follows:

1) Turn on the transmitter, and set it to transmit the pulse train continuously.
2) Tune a spectrum analyzer to the transmitter, carrier frequency, and set the spectrum analyzer resolution bandwidth wide enough to encompass all significant spectral components. The video bandwidth should be at least as wide as the resolution bandwidth.
3) Set the spectrum analyzer vertical scale (amplitude) to the linear mode and the analyzer frequency scan to 0 Hz. If necessary, move the receiving antenna closer to the device to obtain a convenient signal level.
4) Connect a storage oscilloscope to the video output of the spectrum analyzer that is used to demodulate and detect the pulse train. (Although the pulse train may be viewed by using just a spectrum analyzer with a scan width of 0 Hz, the use of an oscilloscope facilitates viewing the pulses and allows a more accurate measurement of their width.)
5) Adjust the oscilloscope settings to observe the pulse train, and determine the number and width of the pulses, as well as the period of the train.
6) Adjust the transmitter controls, jumper wires, or software to maximize the transmitted duty cycle.
7) Measure the pulsewidth by determining the time difference between the two half-voltage points on the pulse.
8) When the pulse train is less than 100 ms, including blanking intervals, calculate the duty cycle by averaging the sum of the pulsewidths over one complete pulse train. Alternatively, or when the pulse train exceeds 100 ms, calculate the duty cycle by averaging the sum of the pulsewidths over the 100 ms width with the highest average value. [The duty cycle is the value of the sum of the pulse widths in one period (or 100 ms), divided by the length of the period (or 100 ms)].
9) Multiply the peak-detector field strength (expressed in μV/m) of an emission from a transmitter using pulsed modulation by the duty cycle just measured to determine the average detector field strength of that emission for comparison to the average detector limit.

Copyright © 2001 IEEE. All rights reserved.

If regulations do not require radiated measurements above 1 GHz, proceed to step m). If radiated measurements above 1 GHz are required, an instrument capable of measuring both peak and average detector function signals shall be used. Set the bandwidth of this instrument to 1 MHz and the detector function to the peak mode. Measure final radiated emissions above 1 GHz from the EUT by following the procedures in 8.2.4 and 13.1.4.2.

k) If all of the emission levels above 1 GHz as measured with the peak detector function comply with the average limit specified by the appropriate regulations, proceed to step m). If any of these emission levels exceed the average limit but comply with the peak limit, proceed to step l).

l) Set the detector function of the measuring instrument to the average mode, using the procedures described in 8.2.4 and 13.1.4.2, and remeasure only those emissions from step k) that complied with the peak limits but exceeded the average limits.

m) Record the EUT arrangement, operating mode, and cable or wire positions used for final radiated emission measurements. This can be done with either diagrams or photographs.

n) Prepare the final test report data in accordance with Clause 10.

Where radiated measurements are required on an EUT on more than one operating frequency, the report shall list the field strength measured at the fundamental frequency, the field strength of the three highest harmonic or spurious emissions relative to the limit, and the field strength of the three highest restricted band emissions relative to the limit and the frequencies on which these were observed, for each operating frequency measured.

NOTE—For the purposes of this standard, spurious emissions shall include out-of-band emissions typically associated with or generated by the modulating signal.

I.5 Frequency measurements

NOTE—I.5 applies only to devices in which these measurements are required by the procuring or regulatory agency.

I.5.1 Measurements of operating frequency

a) Operating frequency measurements may be made at ambient room temperature if it is within the range of +15 to +25 °C; otherwise, an environmental temperature test chamber set for a temperature of +20 °C shall be used. An antenna should be connected to the antenna output connector of the EUT if possible. Use of a dummy load could affect the output frequency of the EUT. If the EUT is equipped with or uses an adjustable-length antenna, it should be fully extended.

b) Supply the EUT with nominal ac voltage, or install a new or fully charged battery in the EUT. Turn the EUT on, and couple its output to a frequency counter or other frequency-measuring device of sufficient accuracy, considering the frequency tolerance with which the EUT shall comply.

NOTE—An antenna connected to the measuring instrument with a suitable length of coaxial cable may be placed near the EUT (e.g., 15 cm away) for this purpose.

Tune the EUT to any one of the frequencies specified in 13.1.1. Adjust the location of the measurement antenna and the controls on the measuring instrument to obtain a suitable signal level (i.e., a level that will not overload the measuring instrument, but is strong enough to allow measurement of the operating or fundamental frequency of the EUT). Turn the EUT on, and measure the EUT operating frequency at start-up, and two, five, and ten minutes after startup. Four measurements in total are made.

c) Turn the EUT off, and place it inside an environmental chamber, if appropriate, or position it as specified in 6.2. Allow the chamber to stabilize at +20 °C (approximately 30 minutes) before proceeding.

 Copyright © 2001 IEEE. All rights reserved.

d) If 13.1.1 requires measurements on only one operating frequency, proceed to step e); otherwise, turn the EUT off and allow sufficient time for it to stabilize at ambient temperature, and then repeat step c) with the EUT set successively to each of the additional operating frequencies specified in 13.1.1.

e) Prepare the final test report in accordance with Clause 10.

I.5.2 Measurements of frequency stability vs. temperature

a) Place the de-energized EUT in an environmental temperature test chamber. Supply the EUT with nominal ac voltage, or install a new or fully charged battery in the EUT. An antenna should be connected to the antenna output connector of the EUT if possible. Use of a dummy load could affect the output frequency of the EUT. If the EUT is equipped with or uses an adjustable-length antenna, it should be fully extended.

b) Turn the EUT on, and couple its output to a frequency counter or other frequency-measuring device of sufficient accuracy, considering the frequency tolerance with which the EUT shall comply.

NOTE—An antenna connected to the measuring instrument with a suitable length of coaxial cable may be placed near the EUT (e.g., 15 cm away) for this purpose.

Tune the EUT to one of the number of frequencies specified in 13.1.1. Adjust the location of the measurement antenna and the controls on the measuring instrument to obtain a suitable signal level (i.e., a level that will not overload the measuring instrument, but is strong enough to allow measurement of the operating or fundamental frequency of the EUT).

c) Turn the EUT off, and place it inside an environmental chamber set to the highest temperature specified by the procuring or regulatory agency. For devices that are normally operated continuously, the EUT may be energized while inside the test chamber. For devices that have oscillator heaters, energize only the heater circuit while the EUT is inside the chamber.

d) Allow sufficient time (approximately 30 minutes) for the temperature of the chamber to stabilize. While maintaining a constant temperature inside the environmental chamber, turn the EUT on and measure the EUT operating frequency at startup, and two, five, and ten minutes after startup. Four measurements in total are made.

e) If 13.1.1 requires measurements on only one operating frequency, proceed to step f); otherwise, successively tune the EUT to each of the additional operating frequencies specified in 13.1.1 and repeat step d).

f) Repeat step d) and step e) with the temperature chamber set to the lowest temperature specified by the procuring or regulatory agency. Be sure to allow the environmental chamber temperature to stabilize before performing these measurements.

g) Prepare the final test report in accordance with Clause 10.

I.5.3 Frequency stability vs. input voltage

a) This test may be made at ambient room temperature if it is within the range +15 to +25 °C; otherwise, an environmental temperature test chamber set for a temperature of +20 °C shall be used. If possible, connect an antenna to the output terminals of the EUT because use of a dummy load could affect the output frequency of the EUT. If the EUT is equipped with or uses an adjustable-length antenna, it should be fully extended.

b) Supply the EUT with nominal ac voltage, or install a new or fully charged battery in the EUT. Turn on the EUT, and couple its output to a frequency counter or other frequency-measuring device of sufficient accuracy, considering the frequency tolerance with which the EUT shall comply.

Copyright © 2001 IEEE. All rights reserved.

NOTE—An antenna connected to the measuring instrument with a suitable length of coaxial cable may be placed near the EUT (e.g., 15 cm away) for this purpose.

c) Tune the EUT to any one of the frequencies specified in 13.1.1. Adjust the location of the measurement antenna and the controls on the measuring instrument to obtain a suitable signal level (i.e., a level that will not overload the measuring instrument, but is strong enough to allow measurement of the operating or fundamental frequency of the EUT). Turn the EUT off, and place it inside an environmental chamber, if appropriate, or position it as specified in 6.2. Allow sufficient time (approximately 30 minutes) for the chamber to stabilize at +20 °C before proceeding. Turn the EUT on, and measure the EUT operating frequency at startup, and two, five, and ten minutes after startup. Four measurements in total are made.

d) If 13.1.1 requires measurements on only one operating frequency, proceed to step e); otherwise, successively tune the EUT to each of the additional operating frequencies specified in 13.1.1 and repeat step c).

e) If the EUT is powered from the ac powerlines, supply it with 85% nominal ac voltage and repeat step c) and step d) before proceeding to step f). If the EUT is battery powered, proceed to step g).

f) If the EUT is powered from the ac powerlines, supply it with 115% nominal ac voltage and repeat step c and step d) before proceeding to step g).

g) Prepare the final test report in accordance with Clause 10.

I.6 Occupied bandwidth measurements

NOTE—I.6 applies only to devices in which these measurements are required by the procuring or regulatory agency.

a) Check the calibration of the measuring instrument using either an internal calibrator or a known signal from an external signal generator.

b) A spectrum analyzer or other instrument providing a spectral display is recommended for these measurements. Video filtering is not used during occupied bandwidth tests.

NOTE—The bandwidth of the measuring instrument should be small when compared with the maximum allowed bandwidth to accurately measure the bandwidth of the transmitter with respect to the limit. Too narrow a bandwidth would result in inappropriate measurements in certain cases; therefore, the measuring bandwidth shall be set to a value greater than 5% of the allowed bandwidth. If no bandwidth specifications are given, use the following guidelines:

Fundamental frequency being measured	Minimum instrument bandwidth
9 kHz to 30 MHz	1 kHz
30 MHz to 1000 MHz	10 kHz
1000 MHz to 40 GHz	100 kHz

c) Position the EUT as specified in 6.2. Supply the EUT with nominal ac voltage, or install a new or a fully charged battery in the EUT. Turn on the EUT, and set it to any one convenient frequency within its operating range. Set a reference level on the measuring instrument equal to the specified bandwidth or –26 dB. Adjust the spectrum analyzer resolution bandwidth, sweep rate, and frequency scan with consideration to the frequencies used for modulation, so that the display is calibrated.

 Copyright © 2001 IEEE. All rights reserved.

d) Apply modulation signal(s) as specified in 13.1.1.1, and measure the frequencies of the modulated signal from the EUT, where it is the specified number of decibels below the reference level set in step c). This is the occupied bandwidth specified in 13.1.7. This may be done with plotted graphs or photographs of the measuring instrument display.

e) Prepare the final test report in accordance with Clause 10.

I.7 Input power measurements

NOTE—I.7 applies only to devices in which these measurements are required by the procuring or regulatory agency.

a) Place the EUT as specified in 6.2. If possible, connect an antenna to the output terminals of the EUT because use of a dummy load could affect the output frequency of the EUT. If the EUT is equipped with or uses an adjustable-length antenna, it should be fully extended.

b) Supply the EUT with nominal ac voltage, or install a new or a fully charged battery in the EUT. Typical modulation shall be applied to the EUT during these tests.

c) Energize the EUT with rated supply voltage and set it to any one convenient frequency specified in 13.1.1. For measurement of the input power to the final RF stage, while varying the input modulation sources, measure the voltage at the supply to the final RF stage of the EUT, and the current into that stage, using a dc voltmeter and ammeter of appropriate ranges. The input power to the final RF stage is the product of these values. For input power measurements on an intentional radiator, use a voltmeter and ammeter and measure, as appropriate, either the ac or dc voltage and current at the ac power cord or battery input terminals of the intentional radiator. Again, the input power is the product of these values.

d) Prepare the final test report in accordance with Clause 10.

Copyright © 2001 IEEE. All rights reserved.

Annex J

(informative)

Applicable clause of C63.4 by equipment type

J.1 Information technology equipment applicable clauses

NOTE—Clauses followed by the * sign refer to specific requirements.

J.1.1 Test facility requirements

— Clause 4: Measurement instrumentation
— Annex F: Verification of LISN characteristics
— Clause 5: General requirements

J.1.2 Equipment conditioning during testing

— Clause 5: General operating conditions and equipment arrangement
— Clause 11: Measurement of information technology equipment (ITE)*

J.1.3 Measurements

— Clause 7: AC powerline conducted emission measurements
— Clause 8: Radiated emission measurements
— Annex D: Method of exploratory radiated emission maximization
— 11.5: AC powerline conducted emission measurements
— 11.6: Radiated emissions measurements *
— Annex E: Step-by-step guidance for testing personal computers and associated peripherals

J.2 Receiver applicable clauses

J.2.1 Test facility requirements

— Clause 4: Measurement instrumentation
— Annex F: Verification of LISN characteristics
— 5.1: General requirements

J.2.2 Equipment conditioning during testing

— Clause 6: General requirements for EUT
— Clause 12: Measurement of unintentional radiators other than ITE*
— 12.1: Measurement of receivers*

 Copyright © 2001 IEEE. All rights reserved.

J.2.3 Measurements

— Clause 7: AC powerline conducted emission measurements
— Clause 8: Radiated emissions measurements
— Annex D: Method of exploratory radiated emissions maximization
— 12.1.3: AC powerline conducted emission measurements
— 12.1.4: Radiated emission measurements
— Annex H.1: AC powerline conducted emission measurements setup
— Annex H.2: AC powerline conducted emission measurements
— Annex H.3: Radiated emission measurement setup
— Annex H.4: Radiated emissions testing

J.2.4 Measurements that may be required

— 12.1.5: Antenna-conducted power measurements*
— Annex H.5: Antenna-conducted power measurements for receivers

J.3 TV Interface device applicable clauses

J.3.1 Test facility requirements

— Clause 4: Measurement instrumentation
— Annex F: Verification of LISN characteristics
— Clause 5: Test facilities

J.3.2 Equipment conditioning during testing

— Clause 6: General requirements for EUT equipment arrangements and operation
— Clause 12: Measurement of unintentional radiators other than ITE*
— 12.2: Measurement of TV interface devices*

J.3.3 Measurements

— Clause 7: AC powerline conducted emission measurements
— Clause 8: Radiated emissions measurements
— Annex D: Method of exploratory radiated emission maximization
— 12.2.3: AC powerline conducted emission measurements
— 12.2.4: Radiated emissions measurements
— Annex H.1: AC powerline conducted measurement setup
— Annex H.2: AC powerline conducted emission measurements
— Annex H.3: Radiated emission measurements setup
— Annex H.4: Radiated emission measurements

Copyright © 2001 IEEE. All rights reserved.

J.3.4 Measurements that may be required

— 12.2.5: Output and spurious conducted level measurements*
— 12.2.6: Antenna transfer switch measurements for unintentional radiators*
— Annex H.6: TV interface device output and spurious level measurements
— Annex H.7: Cable TV antenna transfer switch measurements
— Annex H.8: TV interface device antenna transfer switch measurements

J.4 Low power transmitter applicable clauses

J.4.1 Test facility requirements

— Clause 4: Measurement instrumentation
— Annex E: Step-by-step guidance for testing personal computers and associated peripherals
— Clause 5: Test facilities

J.4.2 Equipment conditioning during testing

— Clause 6: General requirements for EUT equipment arrangements and operation
— Clause 13: Measurement of intentional radiators*

J.4.3 Measurements

— Clause 7: AC powerline conducted emission measurements
— Clause 8: Radiated emission measurements
— Annex D: Method of exploratory radiated emission maximization
— 13.1.3: AC Powerline conducted emission measurements*
— 13.1.4: Radiated emission measurements *
— Annex I.1: AC powerline conducted emission measurements setup
— Annex I.2: AC powerline conducted emission measurements
— Annex I.3: Radiated emission measurements setup
— Annex I.4: Radiated emission measurements

J.4.4 Measurements that may be required

— 13.1.5: Operating frequency measurements*
— 13.1.6: Frequency stability measurements*
— 13.1.7: Occupied bandwidth measurements*
— 13.1.8: Input power measurements*
— Annex I.5: Frequency measurements
— Annex I.6: Occupied bandwidth measurements
— Annex I.7: Input power measurements

 Copyright © 2001 IEEE. All rights reserved.

Annex K

(informative)

Construction and use of the artificial hand

The artificial hand consists of a (strip of) metal foil of specified dimensions, which is placed on or wrapped around that part of the equipment normally touched by the user's hand, in a specified way.

The metal foil is connected in a specified way to the reference point of the disturbance measuring system via an RC element consisting of a capacitor C = 220 pF ± 20% in series with a resistor R = 510 Ω +/= 10%.

The strips of metal foil used to simulate the influence of a user's hand around an equipment handle or an equipment body are typically 60 mm wide.

The lead length between the RC element and the metal foil shall be 1 m long. If the test setup requires longer lead length, the total inductance of the lead shall be less than 1.5 μH if the frequency of measurement is near 30 MHz.

When considering the total of the interconnecting wires as a single wire in free space, the inductance L of the wire is calculated by:

$$L = \frac{\mu 1}{2\pi}\left\{\ln\left(\frac{41}{d}\right) - 1\right\} \text{ Henrys}$$

where

l = length of the wire (in meters),
d = diameter of the wire (in meters),
μ = $4\pi \times 10^{-7}$ H/m,
ln = natural log.

NOTE—When complying with the inductance requirement, the impedance of the LCR network between the strip(s) of metal foil and the reference point is sufficiently dominated by the impedance of the RC element at 30 MHz.

The maximum length of the wire between the RC element and the reference ground is generally met when the wire length does not exceed 1 m. The RC element may, for example, be placed either as close as possible to the metal foil or as close as possible to the reference point. The correct choice largely depends on the (generally unknown) internal common-mode impedance of the disturbance source in the presence of the metal foil and the characteristic impedance of the transmission line formed by the connecting wire and its environment. If the frequency range of the emission measurements is limited to 30 MHz, the position of the RC element is not critical, and a practical position (also from the reproducibility point of view) of the RC element is inside the LISN.

When the conducted emission to the power system is measured, the reference point is the reference ground in the LISN. When this emission is measured on a signal or control line, the reference point is the reference ground of the LISN. The general principle to be followed in the application of the "artificial hand" is that terminal M of the RC element shall be connected to any exposed nonrotating metalwork and to metal foil wrapped around all handles, both fixed and detachable, supplied with the appliance. Metalwork, that is covered with paint or lacquer, is considered an exposed metalwork and shall be directly connected to the RC element.

See 5.7 for detailed application of the "artificial hand."

Copyright © 2001 IEEE. All rights reserved.

Annex L

(informative)

United States standards that require emissions measurements below 9 kHz

The following listed United States standards require emission measurements below 9 kHz. These have their own measurement procedures; thus, they require no reference to C63.4 emission measurement procedures. However, they may require reference to C63.2 and C63.4 for instrumentation.

a) MIL-STD-461E (20 August 1999), Military Standard Requirements for the Control of Electromagnetic Interference Characteristics of Subsystems and Equipment. (Refers to MIL-STD-462 for emission measurement procedures and ANSI C63.2 for instrumentation.)

b) DS-201-0004 (15 October 1976), Electromagnetic Compatibility Standards for Medical Devices. (No reference to instrumentation, but requires some instrumentation covered by ANSI C63.2.)

c) SAE ARP 1972 (January 1986), Recommended Measurement Practices and Procedures for EMC Testing. (Internally describes all measurement procedures and instrumentation.)

 Copyright © 2001 IEEE. All rights reserved.

Annex M

(normative)

Test procedure for emissions testing in TEM waveguides

This appendix describes a procedure for the application of TEM waveguides to emission testing. The basic precept is that products can be categorized into EUT types or classes. For each EUT type, a validation procedure consisting of TEM waveguide and OATS comparison testing shall be completed. Once the validation is performed for an EUT type, any permutation within that EUT type may be tested in the validated TEM waveguide.

The generic term, TEM waveguide, is used in this standard, instead of TEM cell, gigaHertz TEM (GTEM) cell, or TEM line. TEM cell and TEM line refer to a specific closed and opened respectively, two-conductor system, whereas gigaHertz TEM cell is a single port system. Descriptions of the various TEM waveguides and correlation algorithms are contained in the references in this annex.

M.1 Validation and measurement procedures for emissions testing in TEM waveguides in the frequency range of 30 MHz to 1000 MHz

M.1.1 Introduction

TEM waveguides can provide valid, repeatable measurement results of disturbance field strength from equipment. This annex provides basic methods and validation requirements for emission testing in TEM waveguides (TEM cell, wideband-TEM or GTEM cell, parallel-plate stripline, etc.). The basis for this procedure is a specific correlation procedure acceptance between OATS and TEM waveguide measurements using a calculated radiated disturbance model. Once this agreement on this procedure is reached between the testing organization and normally the regulatory body receiving the test report results, TEM waveguide measurements are acceptable in lieu of OATS testing for certain classes of products that are defined below.

M.2 Definitions

Correlation algorithm: A mathematical routine for determining EUT radiated power or equivalent dipole moments from TEM waveguide measured voltages, and for converting TEM waveguide measured voltages to an equivalent open area test site or free-space field strengths at a selected distance from the EUT.

EUT type: Is a grouping of products with sufficient similarity in electromagnetic characteristics to allow testing with the same test installation and the same test protocol. In order to be grouped as an EUT type, a group of products shall be similar in the following characteristics:

a) Equipment class (e.g., telephones, pagers, hand-held transceivers, desktop computers, laptop computers, etc.).
b) Number and type of cables installed for testing (e.g., telephones and telephones with data connection to a computing device may be two different EUT types).
c) Physical size and EUT system configuration (in all cases, the EUT system configuration shall fit within the test volume used in the validation to the OATS); an individual test within an EUT type in which there is a reduction in
    1) The number of cables,
    2) Subsystem components from the EUT configuration used for validation with the OATS is considered to be an acceptable and validated variation.

Copyright © 2001 IEEE. All rights reserved.

Exit cable: A cable that connects the EUT to equipment outside of the TEM waveguide or away from the test site. Hence, an exit cable exits the measuring TEM waveguide or measuring site.

Manipulator: A device with three independent modes of positioning control, which is used to manually or automatically assist with moving an EUT into the positions required by a given test. When installed on the manipulator, all components of an EUT array or system shall maintain a fixed position with respect to a reference point throughout any rotation, and the position of the reference point or approximate geometric center of the EUT shall remain fixed.

Ortho-angle: The angle that the diagonal of a cube makes to each side at the trihedral corners of the cube. This angle is widely used in TEM waveguide testing because its coefficients give a vector sum of unity when three orthogonal readings are made and summed (See Figure M.1). When applied to a TEM waveguide, the ortho-angle may alternatively be described as the angle of a ray passing through the center of the test volume of the TEM waveguide, such that its azimuth is 45° to the centerline of the TEM waveguide and its elevation is 45° above the horizontal plane of the TEM waveguide. Thus, it is 54.7° to the edges of each face of a cube centered in the test volume. This assumes that the cube in question is aligned with the Cartesian coordinate system of the TEM waveguide. When associated with the EUT, the ortho-angle is usually referred to as the *ortho-axis*.

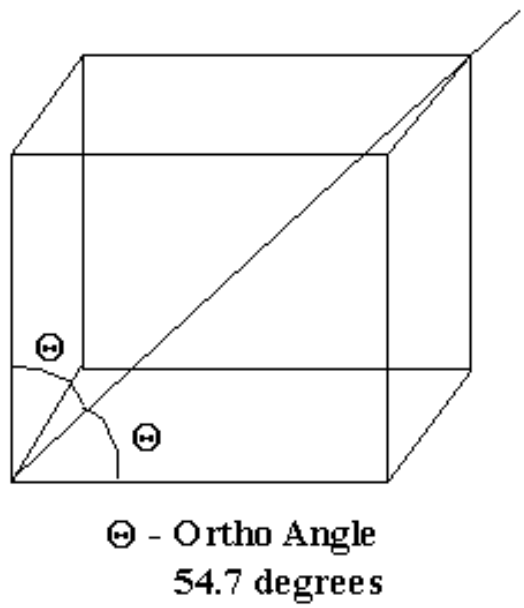

Figure M.1—Ortho-angle

Septum: The inner conductor of a one-port or two-port TEM cell—usually a thin metal plate.

TEM cell: A closed measuring device consisting of an inner and an outer conductor in which a voltage difference creates a TEM-mode electromagnetic field between these conductors. Two-port TEM cells typically have symmetrical tapered input and output ports, whereas a one-port TEM cell typically has a tapered input port and a integral, closed nontapered termination in place of the output port.

TEM waveguide: An open or closed transmission line system that uses the TEM mode over the frequency range of interest. The TEM mode is defined as an electromagnetic field in which the electric and magnetic field vectors are orthogonal to each other and orthogonal to the propagation direction. Common examples

 Copyright © 2001 IEEE. All rights reserved.

are the two-port TEM cell (Crawford cell), the one-port or wideband-TEM cell (example GTEM), and the parallel-plate stripline.

Test volume: A region in space that has been validated to give acceptable accuracy for a particular radiated emission test. Typically, with TEM waveguides, the test volume is defined as a rectangular parallelepiped, which is centered between the septum and the floor and between the two side walls. The test volume is located at a sufficient distance from the input/output tapers or any absorbers to avoid loading effects. Dimensions from the centerline are determined by the accuracy required for the intended test.

Wideband-TEM cell: A TEM cell that has been altered to extend the usable frequency range. Typically, this is achieved by replacing one port of a two-port TEM cell with a wideband, nontapered, hybrid discrete resistor/wave absorber termination.

M.3 TEM waveguide validation requirements

TEM waveguides can provide valid, repeatable measurements results of disturbance field strength from equipment. For a TEM waveguide to be used in emission compliance testing, various criteria shall be fulfilled, as described herein.

M.3.1 TEM waveguide validation requirements

A TEM waveguide shall be validated for every EUT type to be tested. Guidance for classifying products into an EUT type is given M.3.2. The EUT that is selected for use in the validation of an EUT type shall represent the range of variability found within that EUT type, with respect to the number and type of cables, physical size, and system configuration.

The validation procedure evaluates the test system consisting of the TEM waveguide and the measurement procedure. Use of a different TEM waveguide or changes in either the physical TEM waveguide, such as absorber replacement, or the correlation algorithm shall require revalidation of the modified system.

The appropriate procuring or regulatory agency shall be consulted for the acceptance criteria required for the proposed use of the TEM waveguide if they differ from the guidance given in M.5.2.

M.3.2 EUT type validation requirements

A TEM waveguide shall be validated for use with each EUT type that shall be tested in that TEM waveguide. Care shall be taken to ensure that each EUT type conforms with the definition in this standard.

The validation test is to be performed at a minimum of one TEM waveguide and one OATS. The OATS shall meet the NSA requirements of 5.4.6. A minimum of three independent scans over the designated frequency range shall be performed at each TEM waveguide and at each OATS. The data from the various frequency scans shall be analyzed statistically and shown to meet the requirements of this clause. As part of the initial validation of a TEM waveguide, it is recommended that comparison be established between two OATS. The purpose of this comparison is to verify the validation procedure with the OATS to be used for subsequent validations with the TEM waveguide (see M.5.2).

A representative sample unit(s) of the EUT type to be validated shall be tested three times at the selected OATS and TEM waveguide. Each test shall be differentiated by a disassembly and reassembly of the test setup as would normally be done for each new product test. At a minimum, a comparison of ten frequencies with the highest amplitude signal with respect to the disturbance limit at each site and within the TEM waveguide shall be recorded. A larger number of emissions may be used in the comparative data set. If the

Copyright © 2001 IEEE. All rights reserved.

set of frequencies from each site are not identical, the set shall be expanded to include the frequencies with the highest amplitude with respect to the limit from each set.

The same detector function (peak, quasi-peak, or average) shall be used for each frequency in both the TEM waveguide and OATS measurements. The dwell time at each frequency shall be of sufficient length compared with the duty cycle of the signal being measured. If the measurement bandwidth at the OATS shall be reduced to overcome ambient signal interference, the bandwidth of the TEM waveguide measurement at that frequency shall be correspondingly reduced. Likewise, the dwell time used at each frequency shall be the same for both the TEM waveguide and the OATS measurements.

The data shall be compared using the guidance found in M.5.1. For each frequency, the field strength measurements made at the TEM waveguide and the OATS shall be averaged over the three independent scans. The difference between the average field strength at the TEM waveguide and the OATS at each frequency compared shall be calculated. Finally, the mean and standard deviation of the differences at each frequency compared shall be calculated using the formulas included in M.5.1.

NOTE—A generalized NSA procedure for TEM waveguides is under consideration.

M.4 General test procedure and equipment configurations

M.4.1 Introduction

Testing in TEM waveguides involves special considerations. In general, the arrangement guidance given for testing at OATS shall be followed, except where specific physical differences in the test facilities require an alternative arrangement. Differences in arrangement are described in this clause.

M.4.2 TEM waveguide requirements

In order to be adequate for testing a given EUT, a TEM waveguide shall meet the following criterion:

a) The validation procedure described in M.4.1 shall be used to demonstrate that a given TEM waveguide can be used to test a particular EUT type.

b) If the EUT has power or input/output cables that shall exit the TEM waveguide, an equivalent length of these cables shall be configurable within the TEM waveguide, as would be used in an OATS test for that EUT.

The equivalent cable length at the OATS is the length of cable from the EUT to the point at which it exits the test area, which is normally through a hole in the center of the turntable. The cable routing specified in M.4.4 shall be used when determining the cable length. A TEM waveguide, which cannot accommodate an appropriate length of cable, shall not be used for that EUT.

M.4.3 EUT maximization and stabilization

The EUT shall be arranged following the basic directions given in Clause 6 and Clause 8 of the main text of this standard as expanded and modified in this clause. Exploratory testing to determine the emissions characteristics of the EUT as described in 8.3.1.1 shall be performed. In a TEM waveguide, EUT position and orientation substitute for the antenna height, polarization, and turntable rotation considerations at an OATS. The EUT shall be located within the test volume in the TEM waveguide. The EUT shall be centered in the test volume. For the OATS tests, the maximum electric field measured with horizontal and vertical polarizations shall be used for comparison to the TEM waveguide field strength at the same frequency.

 Copyright © 2001 IEEE. All rights reserved.

In a TEM waveguide, EUT system cables shall be handled in a somewhat different fashion than on an OATS. In TEM waveguides equipped with turntables, the EUT system shall be arranged around a circumference with any cables that shall exit the TEM waveguide routed to the center of the turntable. This is similar to an OATS arrangement. In TEM waveguides equipped with manipulators, the EUT system is arranged in a similar fashion to the OATS, but with exit cables routed to a designated edge of the manipulator platform. From the edge of the platform, the cables shall be clamped with a nonconductive fixture perpendicular to the EUT system in all positions. In both cases, interconnecting cables shall be in the same plane as the EUT system and kept as nearly as possible at the same length and separation from the EUT components as they would be on an OATS.

Once the appropriate test configuration is determined, including cable placement, it is imperative that the system be fixed in this position for all positions required by the TEM waveguide correlation algorithm such as those described in references listed in [B3], [B26], [B33] and [B34], as well as those given by the manufacturer of TEM waveguides in terms of software codes to compute the OATS equivalent emission. In order to obtain accurate results, such factors as the position of interconnecting cables relative to the EUT, the gap size at the interfaces in shielded EUT enclosures, and the pressure on mechanical grounding points or gaskets caused by changes in gravity effects as the EUT is rotated shall remain constant in all positions to be measured. This typically requires careful restraint of the EUT and fastening of its attached peripherals to a nonreflective, nonconductive structure or manipulator when testing.

Some TEM waveguides can be configured to be repositioned around a horizontal turntable located at the test volume. In these cases the EUT arrangement is very similar to that on a turntable at an OATS (See Figure M.2, Figure M.3, and Figure M.4). Figure M.2 shows a typical EUT setup in this case. The primary differences from an OATS are that the interconnecting cables are in the same plane as the EUT, and the EUT is arranged around the center of the turntable.

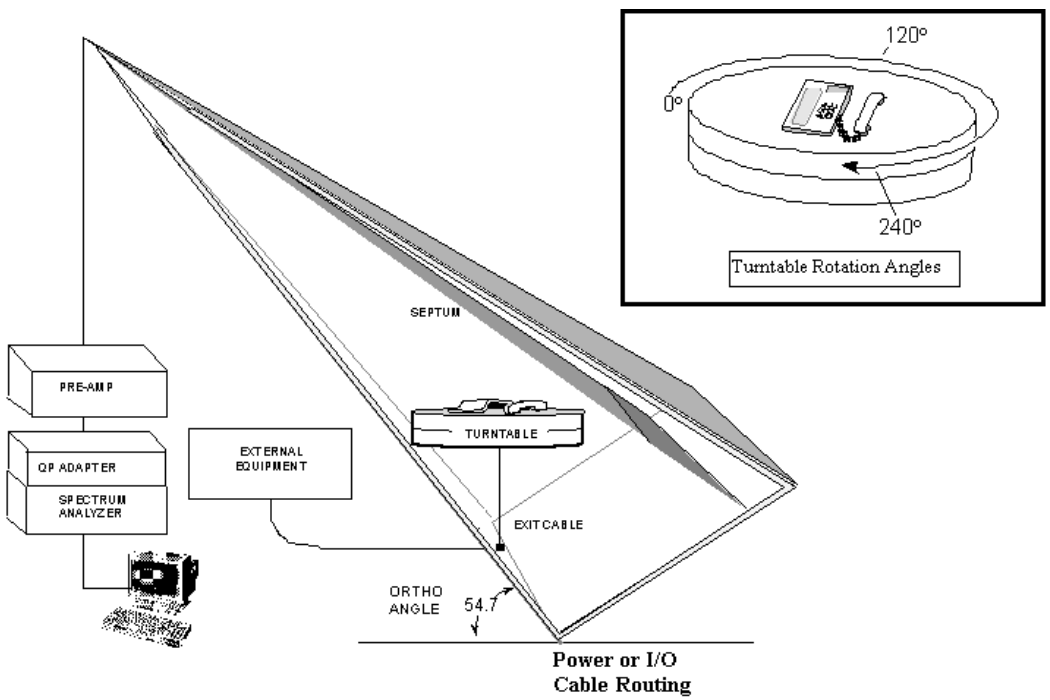

Figure M.2—Exit cable routing in wideband TEM with the cell rotated to the ortho-angle

Copyright © 2001 IEEE. All rights reserved.

M.4.4 Exit cables

EUTs having power or input/output cables that shall exit the TEM waveguide require special consideration. In order to produce results, which correlate well with OATS readings, exit cables shall be routed so that they do not change position relative to the EUT for any of the positions used. Routing the cables along the ortho-angle of the TEM waveguide is the preferred routing. Figure M.2 and Figure M.3 shows an example of this cable routing. Such a routing produces a more accurate reading of the emissions radiated from the cables. Routing the cable along the ortho-angle has the added advantage of allowing a greater length of cable to be placed in the TEM waveguide, which results in a greater resemblance to an OATS test. In TEM waveguides, the exit cable is routed from the EUT in the test volume toward the connector on the floor or wall, which in turn is connected to associated equipment outside the TEM waveguide.

An alternative arrangement to the use of the ortho-angle is to keep the exit cables perpendicular to the EUT and rotate them with the EUT through the required positions. Example EUT and cable relative positions are shown in Figure M.3. In this arrangement, the cables are routed away from the EUT and kept fixed in position as far as the TEM waveguide dimensions allow. Then, the cables are routed to the connector or ac outlet in the TEM waveguide wall following a routing that minimizes coupling of the cable section into the TEM mode fields. Coupling from the final section of a cable is minimized by routing the cable, from the point at which it first exits the test volume around the interior perimeter of the TEM waveguide, to the connector or ac receptacle outlet.

Parasitic impedances between the exit cables and the TEM waveguide wall or floor shall be carefully controlled. Exit cables shall not have excess cable length lying on the wall or floor of the TEM waveguide. Any excess cables shall be maintained in the test volume. The cables shall be routed directly from the connection point to the TEM waveguide into the test volume. Exit cables shall be of the same approximate length as would be required for an OATS test. Any excess cable shall be bundled in the center of the half of each cable closest to the EUT. At the connection point where a cable passes through the TEM waveguide wall, an appropriate impedance stabilization network shall be used to terminate the cable and provide for connection to the outside of the TEM waveguide. For the ac power cable, an LISN shall be used if used at the OATS.

M.4.5 TEM Waveguide test procedure

The basic TEM waveguide to OATS or free-space correlation procedure involves voltage measurements for three independent positions of the EUT in the TEM waveguide. The three-position algorithm has been shown to give sufficient conformity between an OATS and a TEM waveguide for many EUT types. The TEM cell three-position algorithm can be used either with one- or two-port TEM cells. TEM waveguides with other cross-sectional geometries require modified correlation algorithms. Correlation algorithms with more EUT positions (e.g., nine-position, fifteen-position, etc.) can be used if EUT requirements dictate.

In TEM waveguide emission testing, separate three-dimensional Cartesian coordinate systems are assigned to each TEM waveguide and the EUT. A conventional labeling for a TEM waveguide coordinate system xyz has the z-coordinate along the propagation direction, the y-coordinate in the direction of the TEM mode electric field vector, and the x-coordinate orthogonal to both of these. A spatial reference point near the geometric center of the EUT array shall be assigned as the origin of the EUT $x'y'z'$ Cartesian coordinate system. The three-position correlation algorithm uses three EUT rotations where the axes are successively aligned xx' yy' zz', xz' yx' zy', and xy' yz' zx'. Figure M.4 shows an example of the EUT/TEM axes repositioning for the three-position algorithm. The EUT is held in position during the rotations either by a manipulator, or by low dielectric constant plastic or Styrofoam support blocks. Voltage readings are recorded at each position and each frequency, and the OATS-equivalent electric field strength is calculated with the correlation algorithm.

 Copyright © 2001 IEEE. All rights reserved.

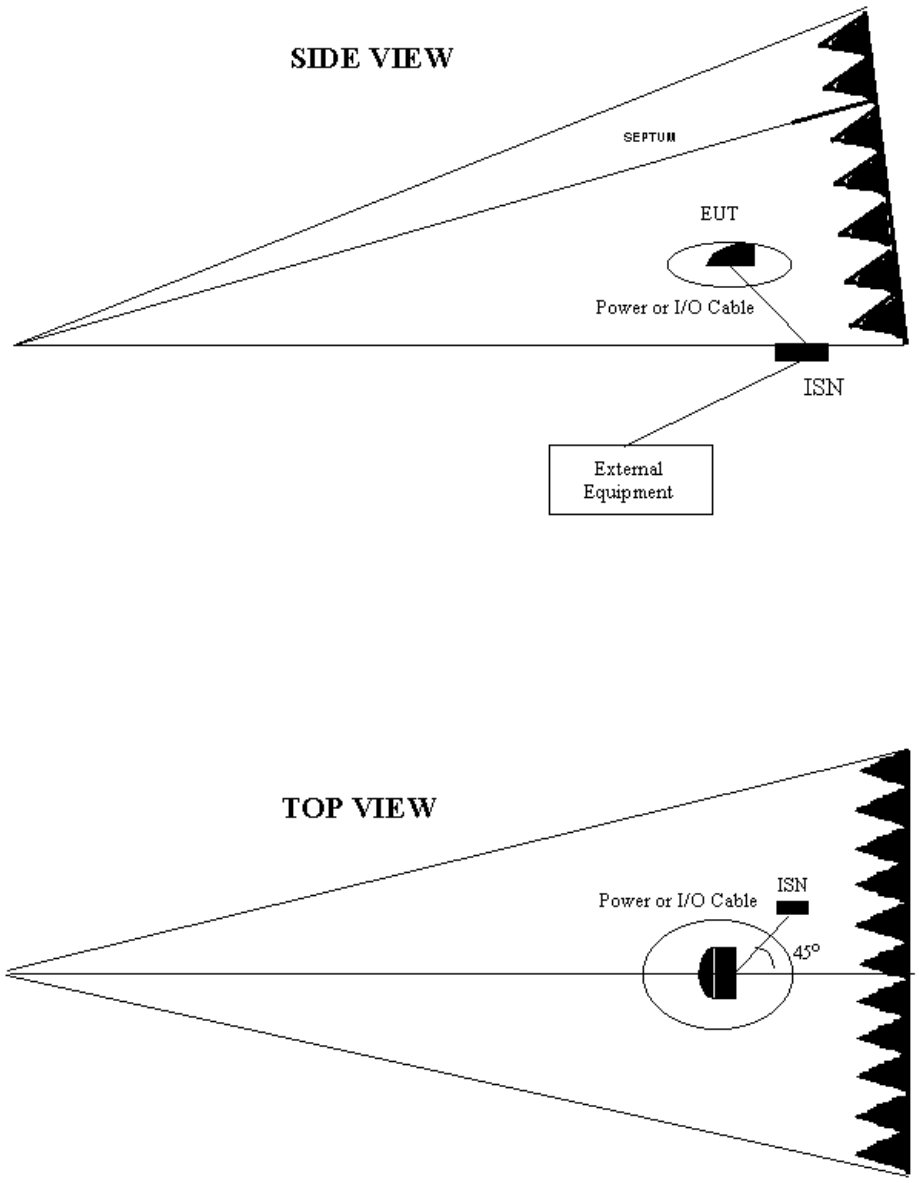

Figure M.3—Exit cable routing in wideband TEM with horizontally oriented cell

Copyright © 2001 IEEE. All rights reserved.

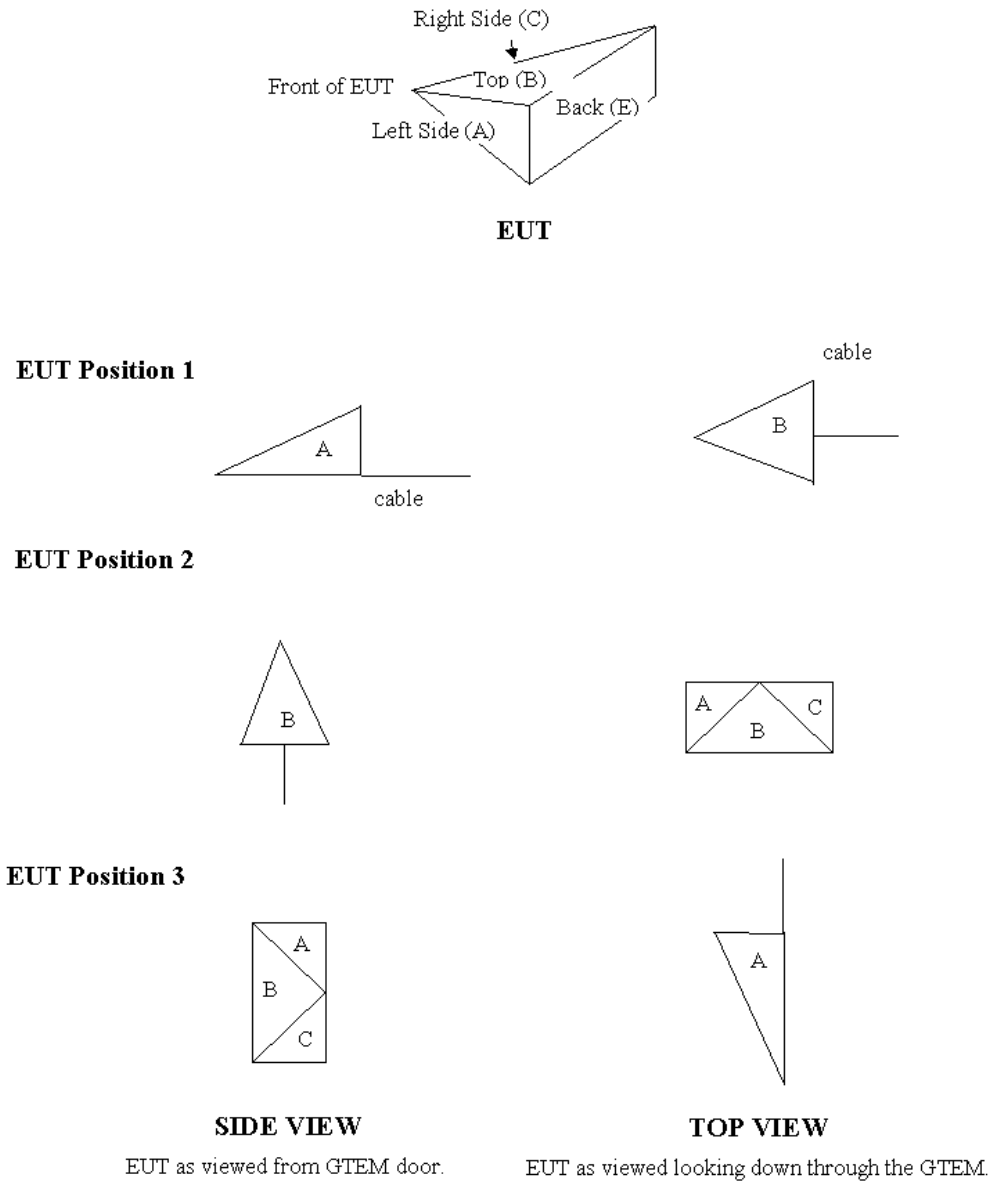

Figure M.4—TEM cell EUT rotation positions using cartesian framework

 Copyright © 2001 IEEE. All rights reserved.

M.5 Test report

The requirements for reporting radiated emission measurements using TEM waveguides follow those stated in Clause 10. In addition, the particular EUT type for which the validation is claimed shall be fully described.

M.5.1 TEM waveguide to OATS validation data

The OATS and OATS-equivalent TEM waveguide data for the measurement data sets at each facility shall be recorded in tabular form with parallel columns in units of dB (μV/m). Measurement data from the TEM waveguide shall be transformed to an OATS-equivalent field strength, computed for the test distance used at the OATS. Wilson [B34] describes the conventional one-port TEM cell three-position correlation algorithm used for computation of an OATS-equivalent field strength. If a different correlation algorithm is used, the test report shall include a description of the correlation algorithm and the reasons for its use.

The averages of the OATS and TEM waveguide data at each measured frequency shall be calculated. When calculating these averages, the field strength readings shall be converted from logarithmic values, dB (μV/m), to linear values, μV/m. The ratio of the averages of the TEM waveguide and OATS measurements shall be calculated. The same detector function (peak, quasi-peak, or average) shall be used for each frequency in the OATS to TEM waveguide comparison.

The mean and standard deviation of the differences shall be computed using the formulas listed below. The average of the TEM waveguide readings at a single frequency is designated as g_i. The average of the OATS readings at the same frequency is designated as o_i. The number of frequencies compared is n, with n greater than or equal to ten. The difference of the averages x_i is given by the equation

$$x_i = g_i - o_i$$

The mean $\bar{x}$ is given by the equation

$$\bar{x} = \frac{1}{n}\sum_{i=1}^{n} x_i$$

The standard deviation s is computed with the equation

$$s = \sqrt{\frac{\sum_{i=1}^{n} x_i^2 - n\bar{x}^2}{n-1}}$$

A sample spreadsheet calculation is shown in Table M1.1 of Annex M1.

In theory, comparisons shall be made between emissions at exactly the same frequency value. In practice, certain frequency values may differ slightly between the TEM waveguide and the OATS data. This shift in frequency values is caused by EUT instability and measurement system frequency uncertainty. Some judgment is necessary in selecting the correct peaks for comparison. For example, in harmonic-rich spectrum, such as is characteristic of many digital devices, the highest peak may shift from one harmonic to another. For these reasons, it is important to record the frequency as well as the amplitude for each frequency compared. An explanation of the reasoning for the selected comparison shall be recorded in the test report.

Copyright © 2001 IEEE. All rights reserved.

M.5.2 TEM waveguide to OATS acceptance criteria

This clause specifies the acceptance criteria that shall be used to determine that a TEM waveguide can be used as a substitute test facility for an OATS. The criteria are based on the maximum difference allowed between the TEM waveguide and the OATS field strength validation results. Once the difference is within allowable values, radiated emission measurements may be made. Reporting requirements follow those stated in Clause 10.

To use the TEM waveguide-calculated results to demonstrate compliance with a disturbance limit, the following steps shall be performed:

a) Provide the mean and standard deviation of the frequency correlations in the report.
b) The mean difference over all frequencies compared between the OATS and TEM waveguide correlation results [see column (12) in Table M1.1, Annex M1] shall be between 0 dB and less than or equal to 3 dB. The standard deviation over all frequencies between the OATS and TEM waveguide correlation results [see column (12) in Table M1.1, Annex M1] shall be less than or equal to 4 dB.
c) No addition of the above mean differences shall be made to the TEM waveguide emission measurement results that are used to compare these results to the disturbance limit. If these results are below the disturbance limit, the EUT (for the EUT type correlated) is considered to be compliant with the appropriate limit.

 Copyright © 2001 IEEE. All rights reserved.

Annex M1

(informative)

Sample OATS to TEM waveguide validation spreadsheet

The data and calculations for a TEM waveguide to OATS validation can easily be analyzed using a spreadsheet approach. The sample spreadsheet in Table M1.1 lists the frequency and amplitude of field strength measurements made at each facility, calculates the average of the readings, calculates the difference between the averages, and calculates the mean and standard deviation of the TEM waveguide to OATS differences.

— Column 1: Frequency of each reading from the TEM waveguide in MHz.

— Column 2–4: Amplitude of each reading from the TEM waveguide in dB (μV/m). Assumes three independent readings.

— Column 5: Average of the TEM waveguide amplitude readings in μV/m. This average is calculated from the linear value, not the logarithmic value. Columns 2–4 first shall be converted from dB (μV/m) to μV/m.

— Column 6: Frequency of each reading taken at the OATS in MHz.

— Column 7–9: Amplitude of each reading taken at the OATS in dB (μV/m). These readings shall be the maximum of the horizontal and vertical polarization readings at each frequency. Assumes three independent readings.

— Column 10: Average of the OATS amplitude readings in μV/m. This average is to be computed from the linear values, not the logarithmic values. Columns 7–9 shall first be converted from dB (μV/m) to μV/m.

— Column 11: Difference between TEM waveguide and OATS average amplitudes in dB. The differences are calculated by 20log (|column5 / column10|).

— Column 12: Mean and standard deviation of the differences in dB (μV/m).

Copyright © 2001 IEEE. All rights reserved.

Table M1.1-Sample spreadsheet

(1)	(2)	(3)	(4)	(5)		(6)	(7)	(8)	(9)	(10	(11)	(12)
TEM Readings						**OATS Readings**						
Frequency (MHz)	**Field Strength dB(μV/m)**			**Average μV/m**		**Frequency (MHz)**	**Field Strength dB(μV/m)**			**Average μV/m**	**Difference (dB)**	
	Scan 1	**Scan 2**	**Scan 3**				**Scan 1**	**Scan 2**	**Scan 3**			
reading	**reading**	**reading**	**reading**	**reading**		**reading**	**reading**	**reading**	**reading**	**formula 2**	**formula 3**	
	formula 1 = ([$10^{[(2)/20]}$ + $10^{[(3)/20]}$ + $10^{[(4)/20]}$) / 3											
												MEAN
	formula 2 = ([$10^{[(7)/20]}$ + $10^{[(8)/20]}$ + $10^{[(9)/20]}$) / 3											formula 4
	formula 3 = 20 * log ((5) / (10))											STD. DEV.
												formula 5
	formula 4 = 20 * log (1 / n * SUM [(11)]) = 20 * log ($\bar{x}$)											
	formula 5 = 20 * log (SQRT ((SUM [$(11)^2$] – n * $\bar{x}^2$) / (n – 1)))											
	n = number of frequencies compared.											

NOTE—A minimum of the 10 frequencies with the highest amplitude readings, relative to the limit, at each facility shall be listed.

 Copyright © 2001 IEEE. All rights reserved.

Annex N

(informative)

Bibliography

[B1] ANSI C63.12-1987, American National Standard for Electromagnetic Compatibility Limits—Recommended Practice.

[B2] Berger, H. S., "A variable position, gravity down GTEM configuration," *Proceedings of the 11th International Symposium on EMC,* Zurich, Switzerland, pp. 465–470, Mar. 1995.

[B3] Berger, H. S., "Radiated emissions test correlation between G-TEM, SAC (semi-anechoic), and OATS facilities using digital phones," *IEEE International Symposium on Electromagnetic Compatibility,* Dallas, TX, pp. 295–299, 1993.

[B4] Berry, J. B., Pate, J. B., and Knight, A. N., "Variations in mutual coupling correction factors for resonant dipoles used in site attenuation measurements," *1990 IEEE International Symposium on EMC,* 90CH2903-3, Washington, D.C., pp. 444–449, Aug. 21–23, 1990.

[B5] Bronaugh, E. L. and Osburn, J. D. M., "The 'hyper-rotated' gigahertz transverse electromagnetic cell (G-TEM)—expanding the performance envelop," E*uro EMC Conference Proceedings,* Sandown Exhibition Centre, England, pp. 103–105, Oct. 5–7, 1993.

[B6] Bronaugh, E. L., "Simplifying EMI immunity (susceptibility) tests in TEM devices," *1990 IEEE International Symposium on Electromagnetic Compatibility Symposium Record,* Washington, D.C., pp. 488–491, Aug. 1990.

[B7] CENELEC EN 45001-1989, General Criteria for the Operation of Testing Laboratories.

[B8] CENELEC EN 55022-1998, Limits and Methods of Measurement of Radio Interference Characteristics of Information Technology Equipment, ed. 1.

[B9] Crawford, M. L., "Measurement of electromagnetic radiation from electronic equipment using TEM transmission cells," U.S. Department of Commerce, National Bureau of Standards, NBSIR 73-306, Feb. 1973.

[B10] Crawford, M. L. and Workman, J. L., "Using a TEM device for EMC measurements of electronic equipment," U.S. Department of Commerce, National Bureau of Standards, Technical Note 1013, July 1981.

[B11] DS-201-0004 (15 October 1976), Electromagnetic Compatibility Standards for Medical Devices.

[B12] FCC 47 CFR Part 2, Frequency Allocation and Radio Treaty Matters; General Rules and Regulations (1990).

[B13] FCC/OET Bulletin 62, Understanding FCC Rules for Digital Devices (1988).

[B14] Federal Communications Commission, "FCC will accept GTEM measurement data under limited conditions," Public Notice 40830, Dec. 2, 1993.

[B15] German, R. F., "Comparison of semi-anechoic chamber and open-field site attenuation measurements," *1982 IEEE International Symposium on EMC,* Santa Clara, CA, pp. 260–265, Sept. 8–10, 1982.

[B16] Heirman, D. N., "Definitive open area test site qualifications," *1987 IEEE International Symposium on EMC,* 87CH2487-7, Atlanta, GA, pp. 127–134, Aug. 25–27, 1987.

Copyright © 2001 IEEE. All rights reserved.

[B17] Heirman, D. N., "Vertical site attenuation—a necessity," *1986 IEEE International Symposium on EMC,* San Diego, CA, pp. 342–346, Sept. 16–18, 1986.

[B18] IEEE 100-1996, IEEE Standard Dictionary of Electrical and Electronics Terms, Sixth Edition.

[B19] IEEE Std 291-1991, IEEE Standard Methods for Measuring Electromagnetic Field Strength of Sinusoidal Continuous Waves, 30 Hz to 30 GHz.

[B20] IEEE Std 376-1975 (Reaff 1987), IEEE Standard for the Measurement of Impulse Strength and Impulse Bandwidth.

[B21] IEEE Std 430-1986 (Reaff 1991), IEEE Standard Procedures for the Measurement of Radio Noise from Overhead Power Lines and Substations.

[B22] ISO/IEC Guide 45 (1985), Guidelines for the Presentation of Test Reports.

[B23] Kawana, T., and Miyajima, S., "Theoretical investigations of site attenuation by means of mutual impedance between antennas—in case of 3 meters distance between antennas," *Journal of the Radio Research Laboratories,* vol. 26, no. 120/121, pp. 135–145, July/Nov. 1979.

[B24] Königstein, D., and Hansen, D., "A new family of TEM devices with enlarged bandwidth and optimized working volume," *Proceedings of the 7th International Symposium on EMC,* Zurich, Switzerland, pp. 127-132, Mar. 1987.

[B25] Ma, M. T. and Kanda, M., "Electromagnetic compatibility and interference metrology," U.S. Department of Commerce, National Bureau of Standards, Technical Note 1099, pp. 17–43, July, 1986.

[B26] Ma, M. T., Sreenivasiah, I., and Chang, D. C., "A method of determining the emission and susceptibility levels of electrically small objects using a TEM device," U.S. Department of Commerce, National Bureau of Standards, Technical Note 1040, July 1981.

[B27] MIL-STD-461E (20 August 1999), Military Standard Requirements for the Control of Electromagnetic Interference Characteristics of Subsystems and Equipment.

[B28] Pate, J. B., "Potential measurement errors due to mutual coupling between dipole antennas and radio frequency absorbing material in close proximity," *1984 IEEE National Symposium on Electromagnetic Compatibility,* San Antonio, TX, pp. 13–19, Apr. 24–26, 1984.

[B29] SAE ARP 1972 (January 1986), Recommended Measurement Practices and Procedures for EMC Testing.

[B30] Smith, A. A., Jr.,German, R. F., and Pate, J. B., "Calculation of site attenuation from antenna factors," *IEEE Transactions on Electromagnetic Compatibility,* vol. 24, no.3, pp. 301–316, Aug. 1982.

[B31] Taggart, H. E. and Workman, H. L., "Calibration principles and procedures for field strength meters (30 Hz to 1 GHz)," U.S. Dept. of Commerce, NBS Tech. Note 370.

[B32] Tai, C. T., "Coupled antennas," *Proceedings of the IRE,* pp. 487–500, Apr. 1948.

[B33] Wilson, P., "On correlating TEM device and OATS Emission Measurements" *IEEE Transactions on Electromagnetic Compatibility,* vol. 37, no. 1, pp. 1-16, Feb. 1995.

[B34] Wilson, P., "On simulating OATS near-field emission measurements via G-TEM device measurements," *1993 IEEE International Symposium on Electromagnetic Compatibility Symposium Record,* Dallas, TX., pp. 53-57, Aug. 1993.

 Copyright © 2001 IEEE. All rights reserved.

Annex O

(informative)

Keyword Index

A
absorbing clamp 2, 12, 14, 51, 90
ambient radio noise 15
antenna calibration 11, 14
antennas 11
    1000 MHz to 40 GHz 75
    30 MHz to 1000 MHz 12,14, 66, 75, 96
    9 kHz to 30 MHz 75
    above 1000 MHz 63, 66
    below 30 MHz 66
    under 30 MHz 15
    biconical 19
    calibration 13, 25, 46, 51, 53, 81, 83, 84, 88,90, 92
    double-ridged guide horn 12
    fixed length 14
    linearly polarized 12, 25, 48
    log periodic 19
    monopole 12, 48
    positioner 18, 19, 47
    resonant 14, 15, 17, 25, 26, 77
    transfer switch 53, 55, 64, 65, 66, 67, 68, 69, 91, 97, 98, 99, 100, 101, 112
    tuned dipole 12, 19, 24, 25, 49
arrangement 5, 12, 16, 18, 32, 40,41, 42, 43, 44, 45, 47, 48, 50, 51, 52, 55, 56, 58, 59, 60, 62, 63, 65, 66, 71, 72, 82, 83, 84, 85, 86, 92, 94, 95, 103, 104, 110, 111, 112, 118, 119, 120
artificial hand 3, 30, 31, 113

B
bandwidth 66, 75, 118
    occupied bandwidth 53, 55,74, 75, 108, 109
    specific bandwidth 8

C
cabling
    cable exit 116
    exit cable116, 119, 120, 121
    interconnect cabling 32, 33, 41, 43, 44, 48
configuration 18, 33, 42, 43, 45, 47, 50, 56, 115, 117, 118, 119
current probe 2, 11, 44

Copyright © 2001 IEEE. All rights reserved.

D
detector 13

E
emissions
conducted emissions 1, 16, 32, 34, 35, 42, 46, 53, 54, 60, 62, 84
powerline 2, 8, 15, 16, 17, 30, 44, 46, 47, 54, 59, 61, 62, 65, 71, 74, 83, 91, 92, 102
radiated emissions 17, 18, 19, 30,47,48, 49, 51, 53, 59, 61,62, 63, 85, 106,110, 111
equipment
accessory equipment 32, 84, 91,92, 93, 102, 103
associated equipment 7, 120
combination tabletop and floor-standing equipment 59
equipment under test (EUT) 5, 7, 8, 11, 15, 16, 18, 32, 40, 41, 43, 44, 55, 56, 57, 59, 70
floor-standing equipment 5, 33, 35, 37, 38, 39, 43, 50,59, 93
host 5, 6, 41,57, 58
keyboard 34, 36, 45,57, 58
modular equipment 40
monitor 57, 58, 59, 69
peripherals 5,6, 34, 36, 41, 42,57, 58, 59, 83, 110, 112, 119
tabletop equipment 33, 36, 41, 42, 45, 58
TEM device 17, 18
TV interface devices 53, 54, 55, 60, 63, 64, 65
visual display units 57
wideband TEM device 52

F
Frequency measurements 106
frequency stability 55, 73, 107

G
groundplane
conducted 60
reference groundplane 6, 16, 17, 18, 19, 26, 30, 32, 33, 34, 40, 43,46, 48, 49, 50, 58, 77, 92
vertical 16, 34, 36, 42, 46, 90

I
impedance 87
input power 46, 53, 55, 75, 109, 112
installation 16, 18, 38, 40, 41

L
line impedance stabilization network (LISN) 2, 6, 7, 16, 51, 83, 84, 87, 88, 91, 102, 103, 110, 111, 113, 120

 Copyright © 2001 IEEE. All rights reserved.

M
manipulation 41, 42, 43, 44, 47, 50, 58, 59, 62, 65, 70
maximization 82, 110, 111, 112, 118
measurements 110, 111, 112
    absorbing clamp measurement 51
    AC powerline conducted measurements 2, 44, 62, 71, 91, 102
    manufacturer s location 15, 30
    maximization 82, 110, 111, 112, 118
    radiated measurements 49, 66, 84, 85, 93, 94, 95, 104, 106

N
normalized site attenuation (NSA) 6, 7,14, 16, 18, 19, 20, 21, 22, 23, 25, 27, 28, 29 77

O
operating 63
operating conditions 10, 32, 40,55, 110
operating frequency 53, 54,55, 61, 62, 69,72, 73,74, 75, 94, 106
P
ports 8, 32, 62, 67, 68, 99
R
radiated emission measurements 2
radiators
    incidental radiator 5
    intentional radiators 6, 55, 55, 69, 70, 102
    unintentional radiators 7, 44, 54, 60, 67, 91
Rayleigh criterion 18
receiver 8,13, 15, 51, 53, 54, 60, 61, 62, 95, 110
reports
    disposition 56
    test report 15, 33, 40, 41, 43, 44, 51,56, 84, 103, 106, 107

S
simulators 32, 33,40

T
test 14, 52
test sites
    alternative test site 18, 19, 22, 25, 27, 28, 29, 30
    normalized site attenuation (NSA) 6, 7,14, 16, 18, 19, 20, 21, 22, 23, 25, 27, 28, 29 77
    Open Area Test Sites (OATS) 1, 7, 18, 19, 30, 48, 49, 50, 102, 115, 117, 118, 119, 120, 123, 124
test site validation 30
transfer 67
turntable 15, 18, 19, 25,30, 43, 47, 84, 93, 103, 118, 119

Copyright © 2001 IEEE. All rights reserved.

U
user s installation 10, 30, 47, 51

V
voltage probe 11, 17

 Copyright © 2001 IEEE. All rights reserved.