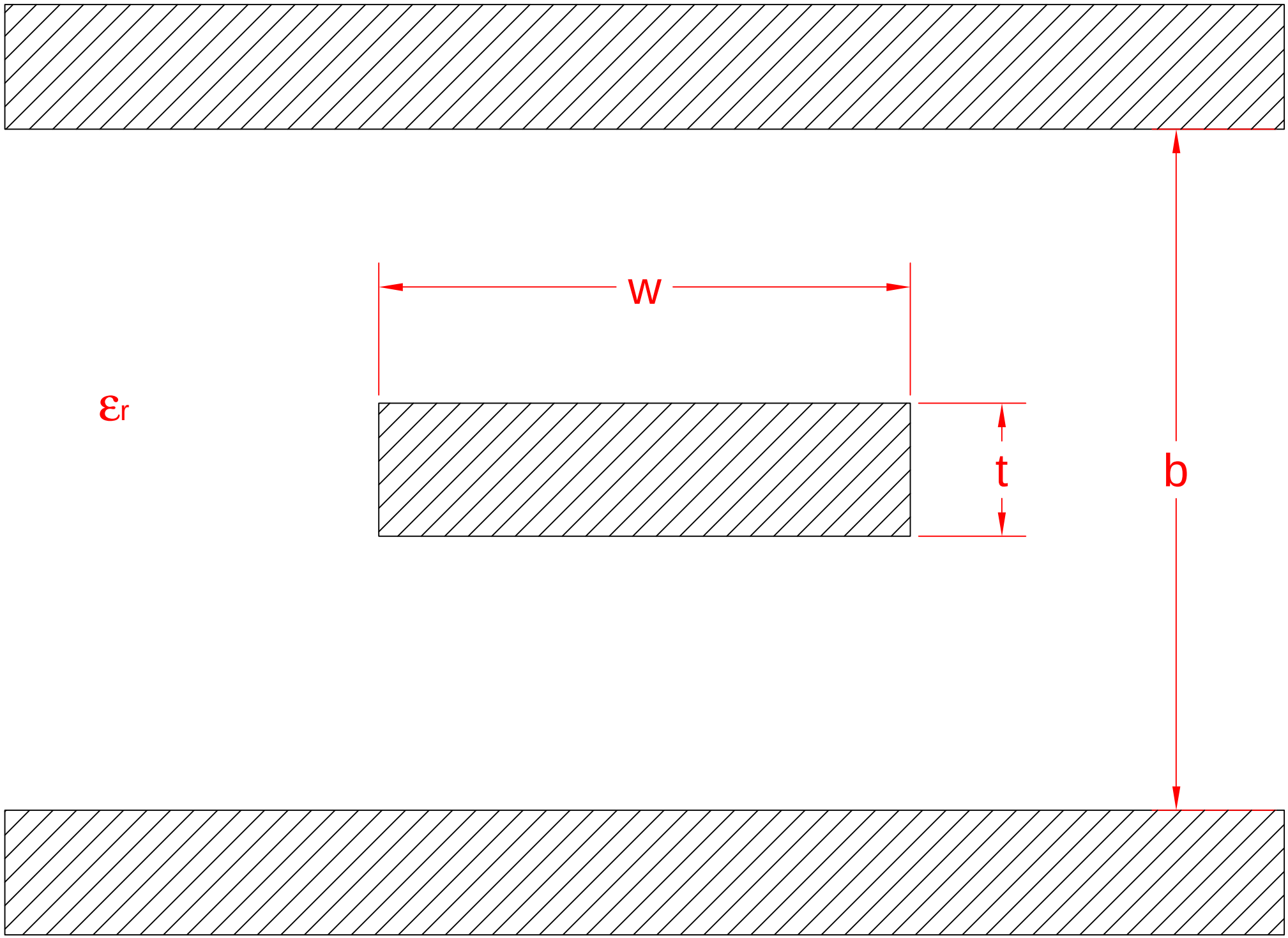
w
εr
t
b