REV.	DESCRIPTION	DRAWN	DATE
		APPD.	DATE

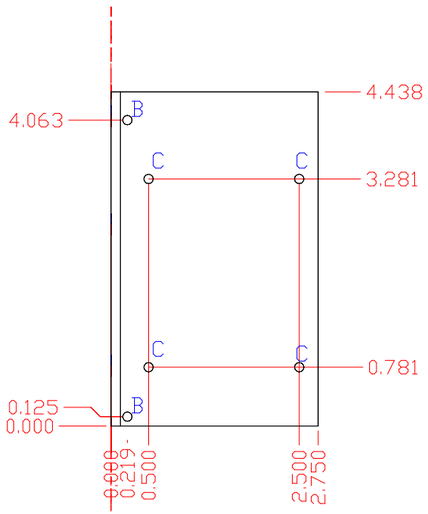

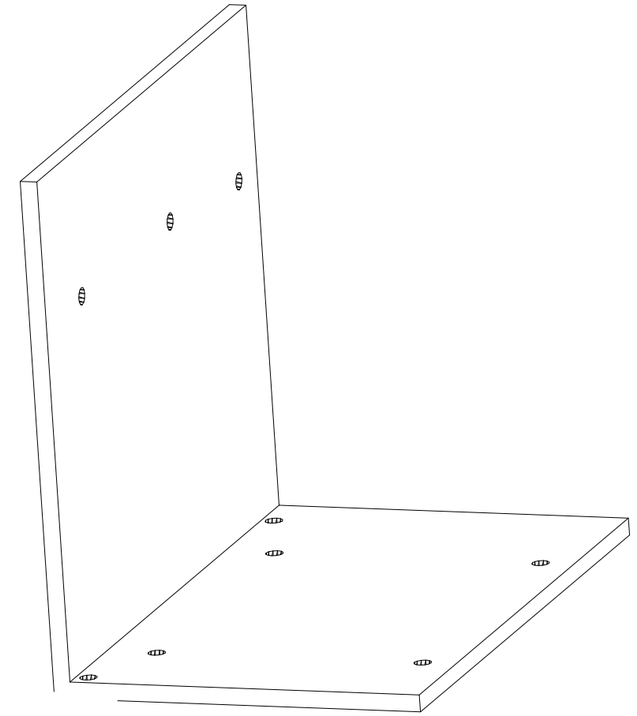

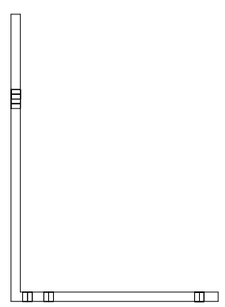

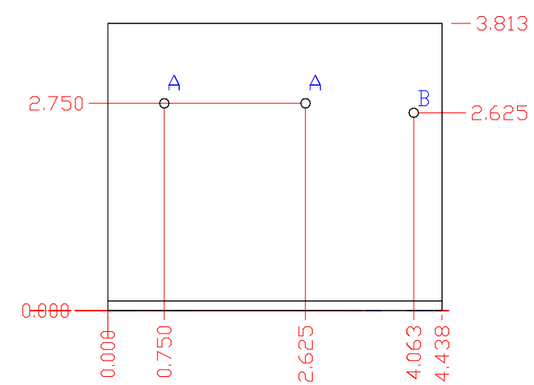

A-Tap 8-32
B-Tap 6-32
C-Drill 1/8"

ITEM	PART NO.	DESCRIPTION OR SIZE	QTY.
PARTS LIST			

UNLESS OTHERWISE SPEC.			ORIGINATOR	D. L. HUFFMAN	11/5/99
FRACTIONS	DECIMALS	ANGLES	DRAWN		
			CHECKED		
			APPROVED		
			USED ON		
			MATERIAL-1/8" Architectural Aluminum		

FERMI NATIONAL ACCELERATOR LABORATORY
UNITED STATES DEPARTMENT OF ENERGY

Calorimeter Electronics
Pulser Control Power Bracket

SCALE	FILMED	DRAWING NUMBER	REV.