REV.	DESCRIPTION	DRAWN	DATE
		APPD.	DATE

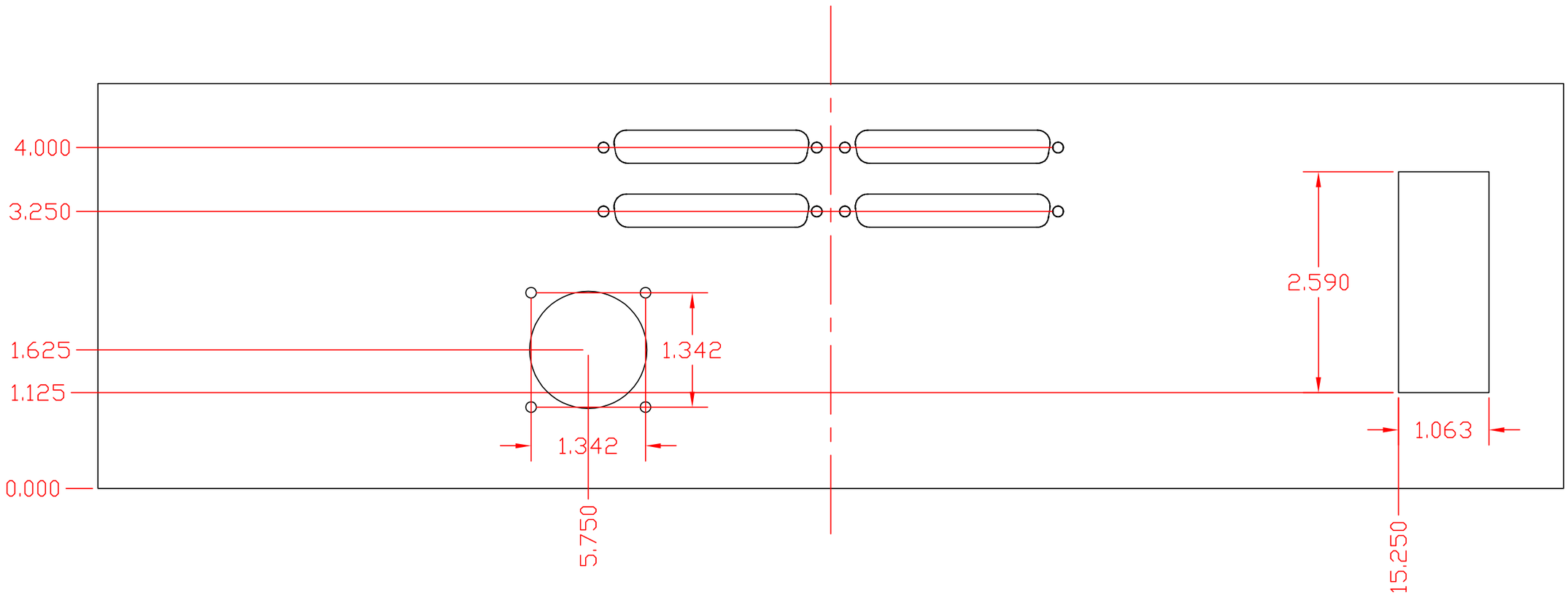

ITEM	PART NO.	DESCRIPTION OR SIZE	QTY.
PARTS LIST			

UNLESS OTHERWISE SPEC.	ENGINEERING	D. L. HUFFMAN	07/03/02
FRACTIONS DECIMALS ANGLES	DRAWN		
	CHECKED		
	APPROVED		
	USED ON		
	MATERIAL-		

FERMI NATIONAL ACCELERATOR LABORATORY
UNITED STATES DEPARTMENT OF ENERGY

Calorimeter Electronics
Pulser Back Panel

SCALE	FILMED	DRAWING NUMBER	REV.