DWG. NO.	SH.	REV

REVISIONS 07/08/2002 10:09:33 AM

REV	DESCRIPTION	DATE	APPROVED

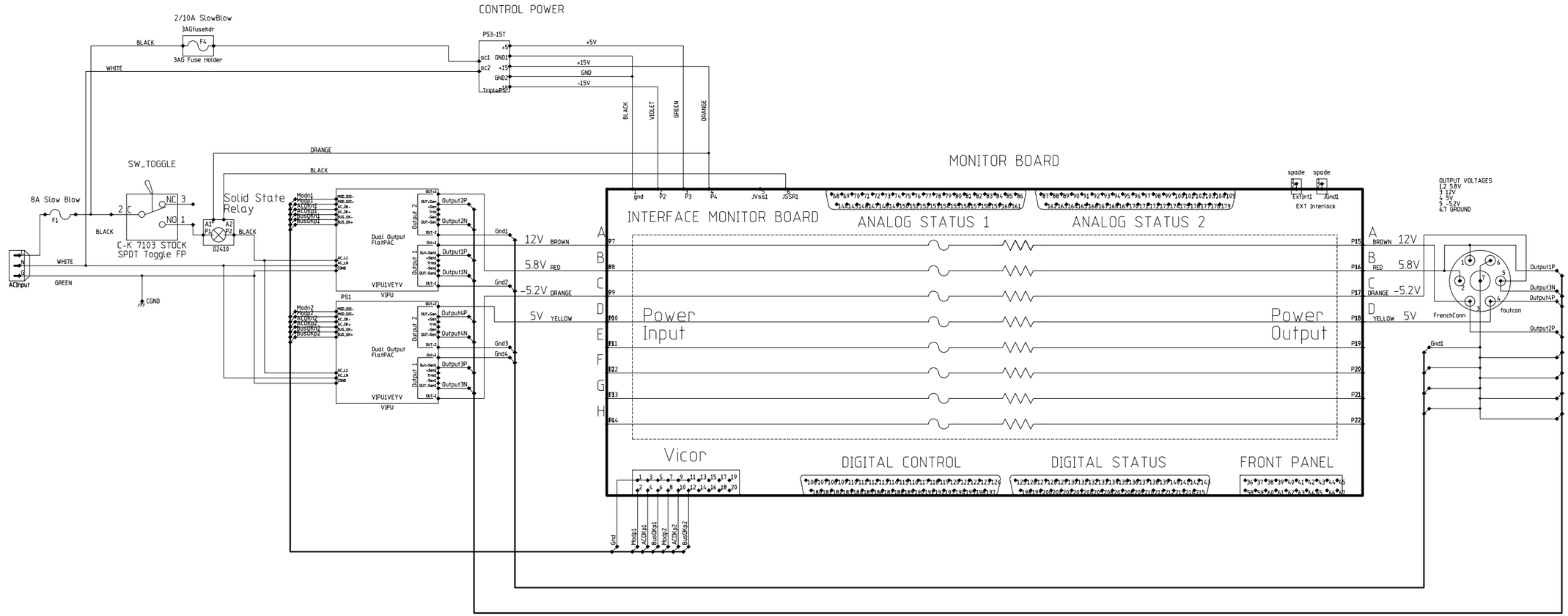

CONTRACT NO.		
APPROVALS	DATE	Calorimeter Upgrade Pulser Power Supply Interface Circuit
DRAWN		
CHECKED		
ISSUED		SIZE D · FSCM NO. · DWG. NO. 3823.121.ED-3302xx · REV
		SCALE · SHEET 01

H:8ND, V:4LA