REVISIONS				
ZONE	REV	DESCRIPTION	DATE	APPROVED
	A	Increased width	2004-01-16	

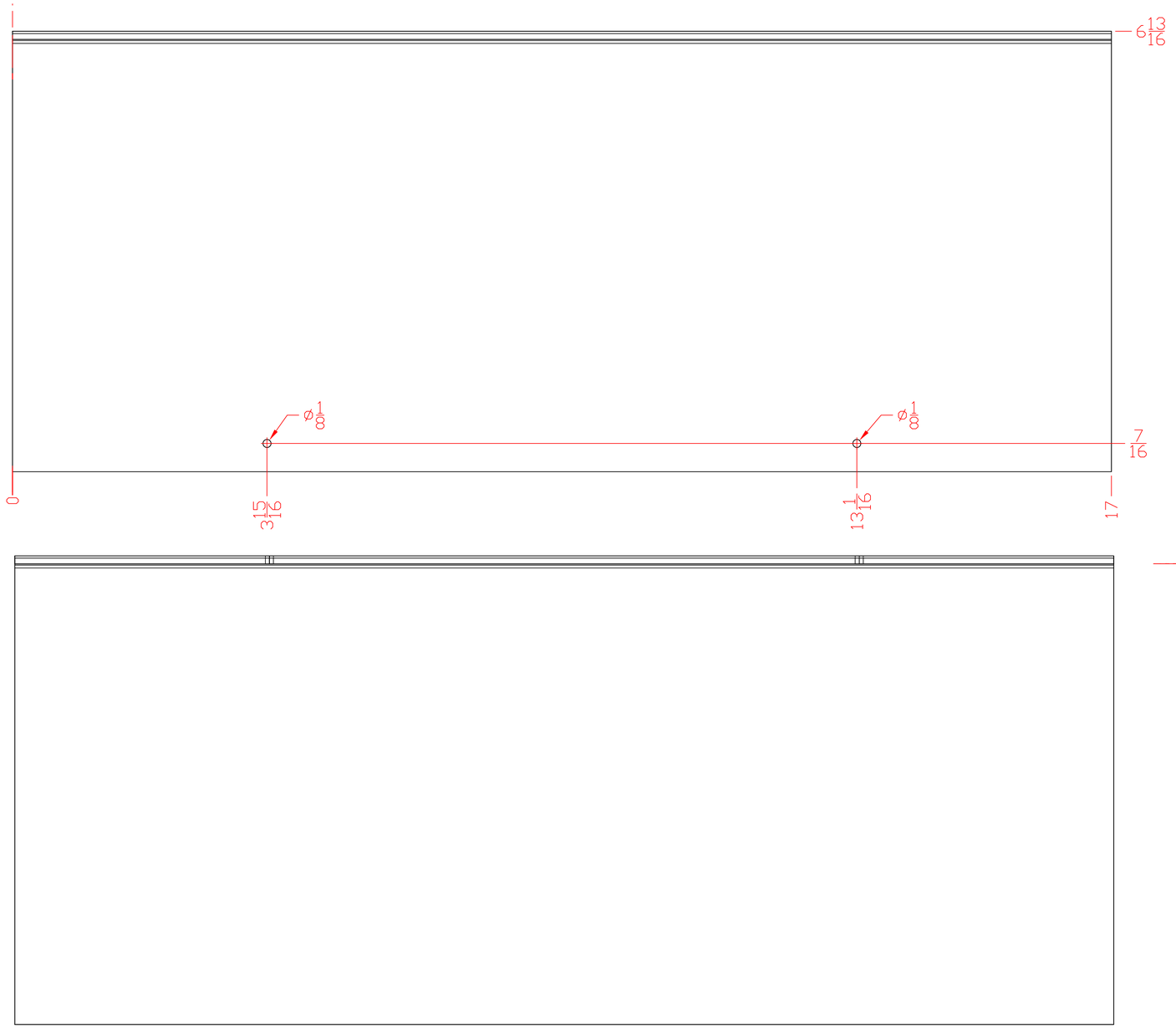

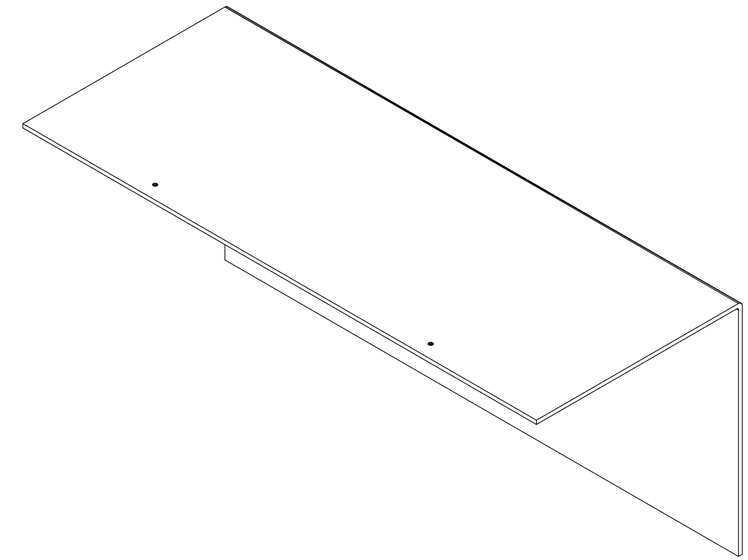

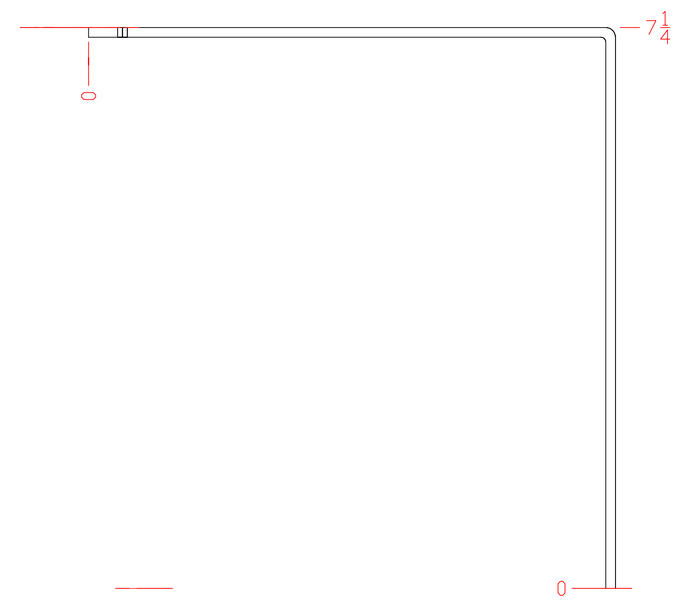

Material: 1/8" Polycarbonate

PPD/ETT/Infrastructure Group David L. Huffman	FERMI NATIONAL ACCELERATOR LABORATORY UNITED STATES DEPARTMENT OF ENERGY
	MINOS Near Detector Master Crate & PS Protective Cover
June 19, 2003	SIZE D · FSCM NO. · DWG NO. 3823.251 MD 330399 · REV –
	SCALE 1:1 · SHEET