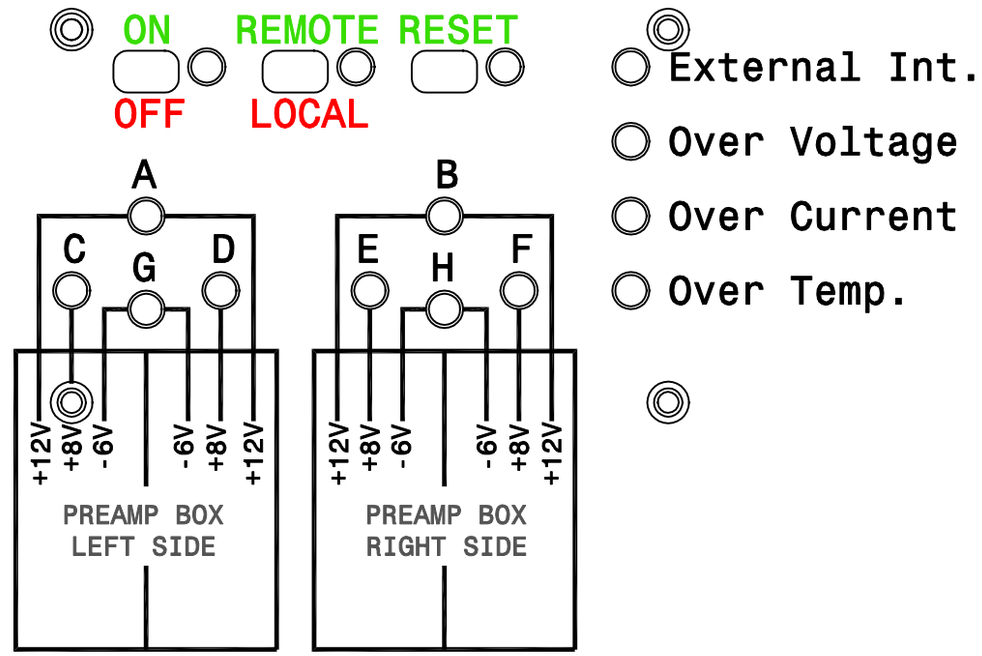

Preamp Power Supply