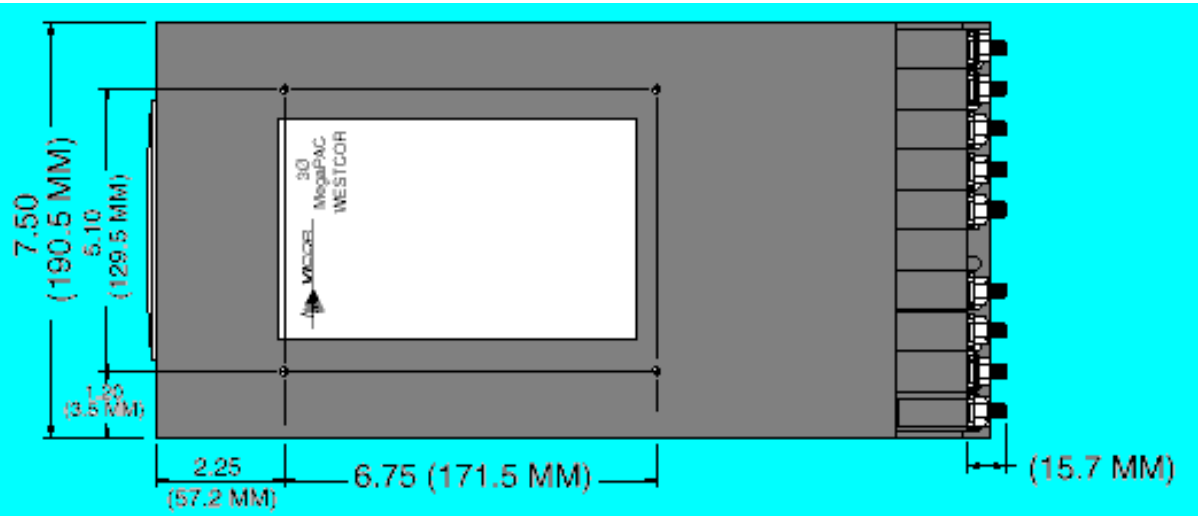

TOP VIEW - EXTENDED LENGTH

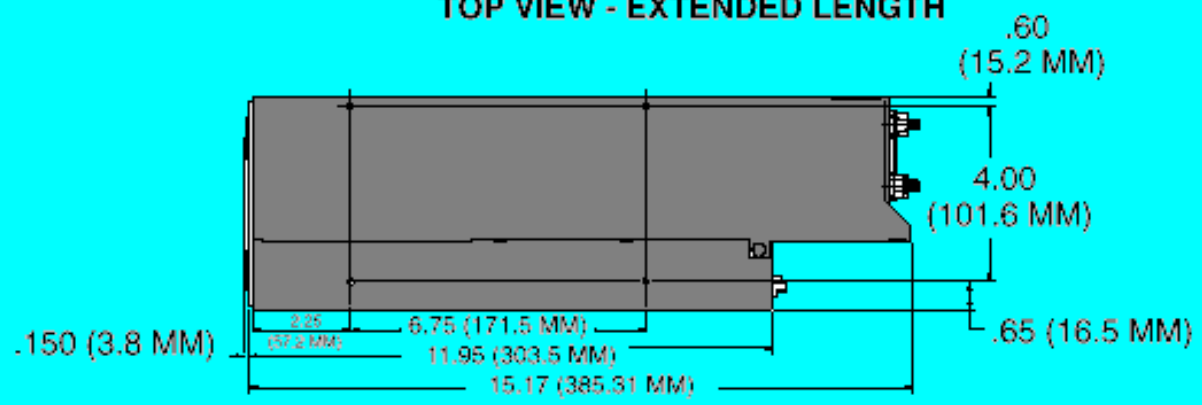

SIDE VIEW - EXTENDED LENGTH

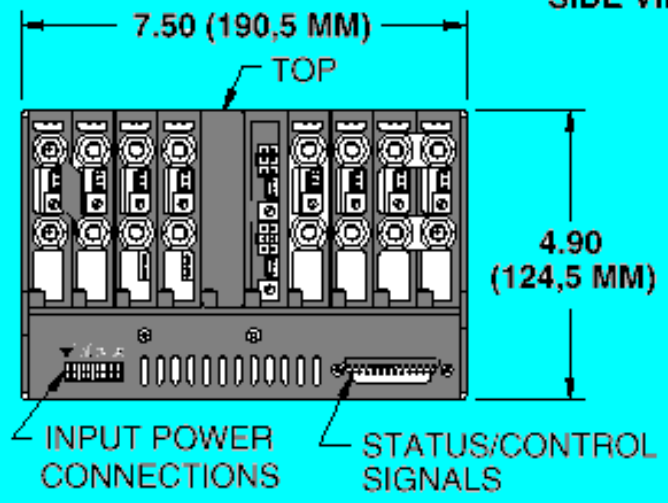

REAR VIEW