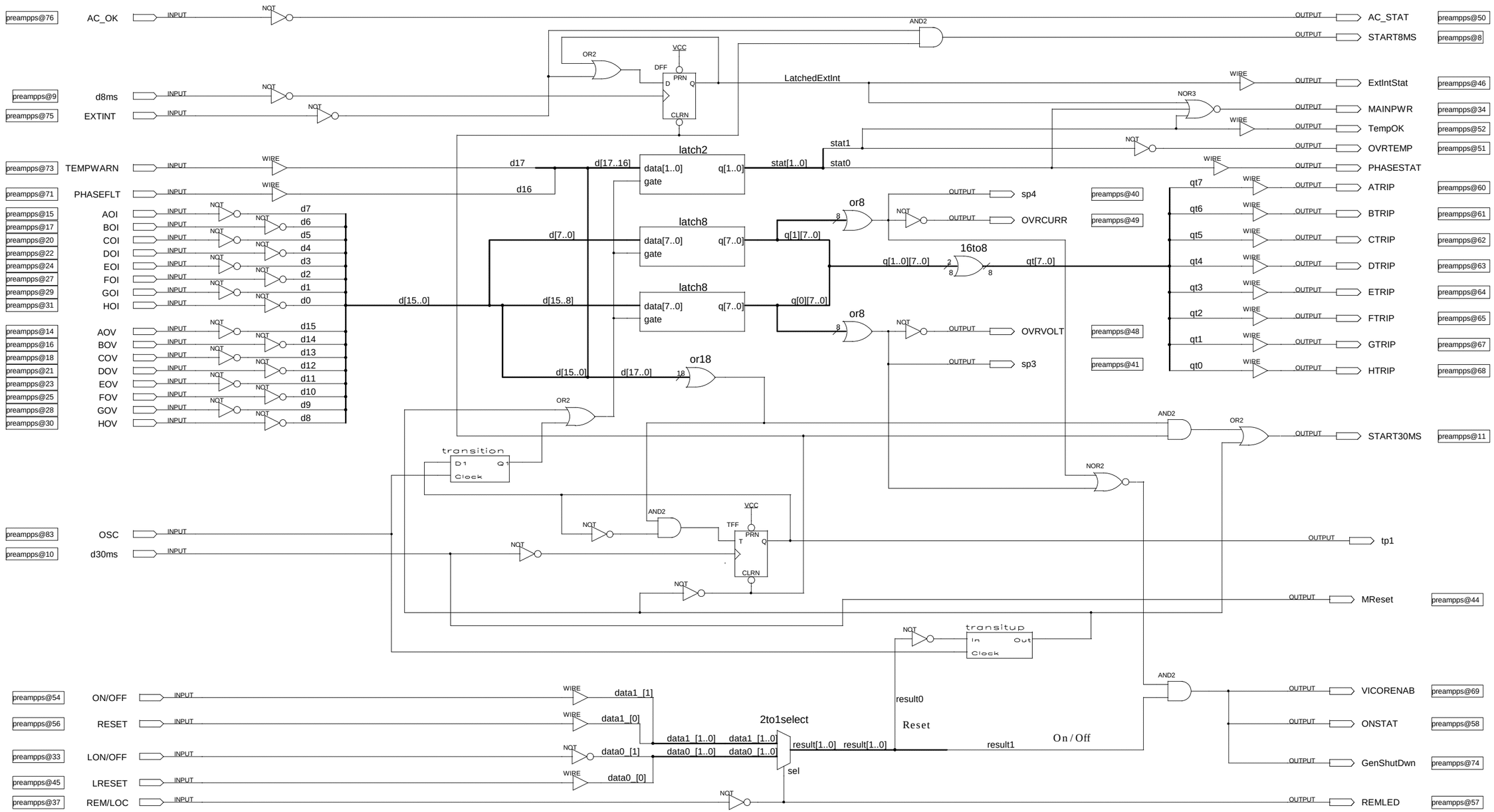

Changed External Interlock to trip under any condition.
Changed External Interlock to ignore signals <10ms in length.
Changed MReset to use one-shot output so reset LED shows.
ANDed the Overtemp & PhaseFault with the MainPwr output.

Preamp Power Supply

Logic Control Circuit

David L. Huffman

August 23, 2000