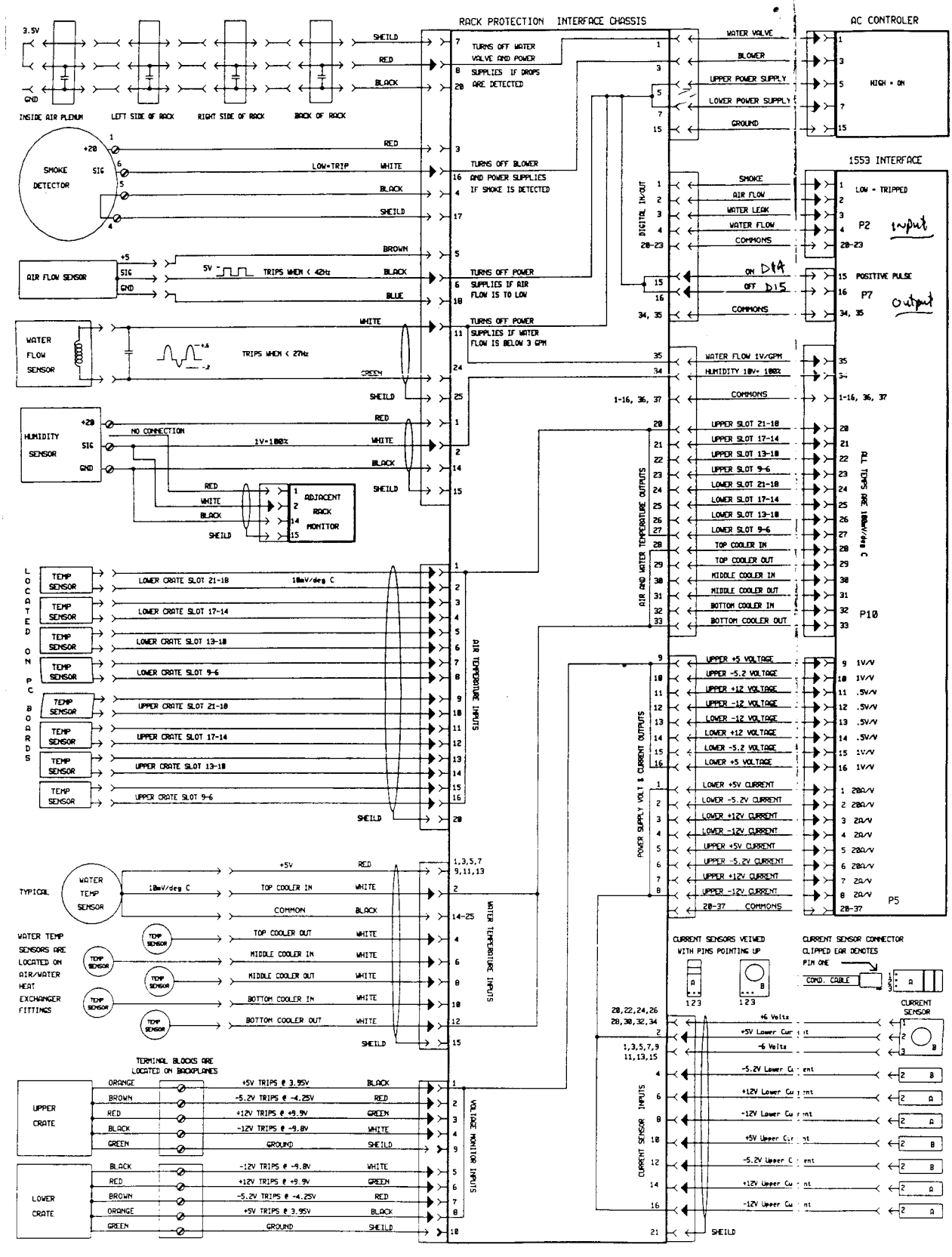

DØ CENTRAL TRACKING FADC ELECTRONICS RACK PROTECTION INTERFACE CHASSIS BLOCK DIAGRAM

NAME	DATE	SCALE	FILMED	REV
MARK WEZENSKY	10-18-9			C

1 of 7

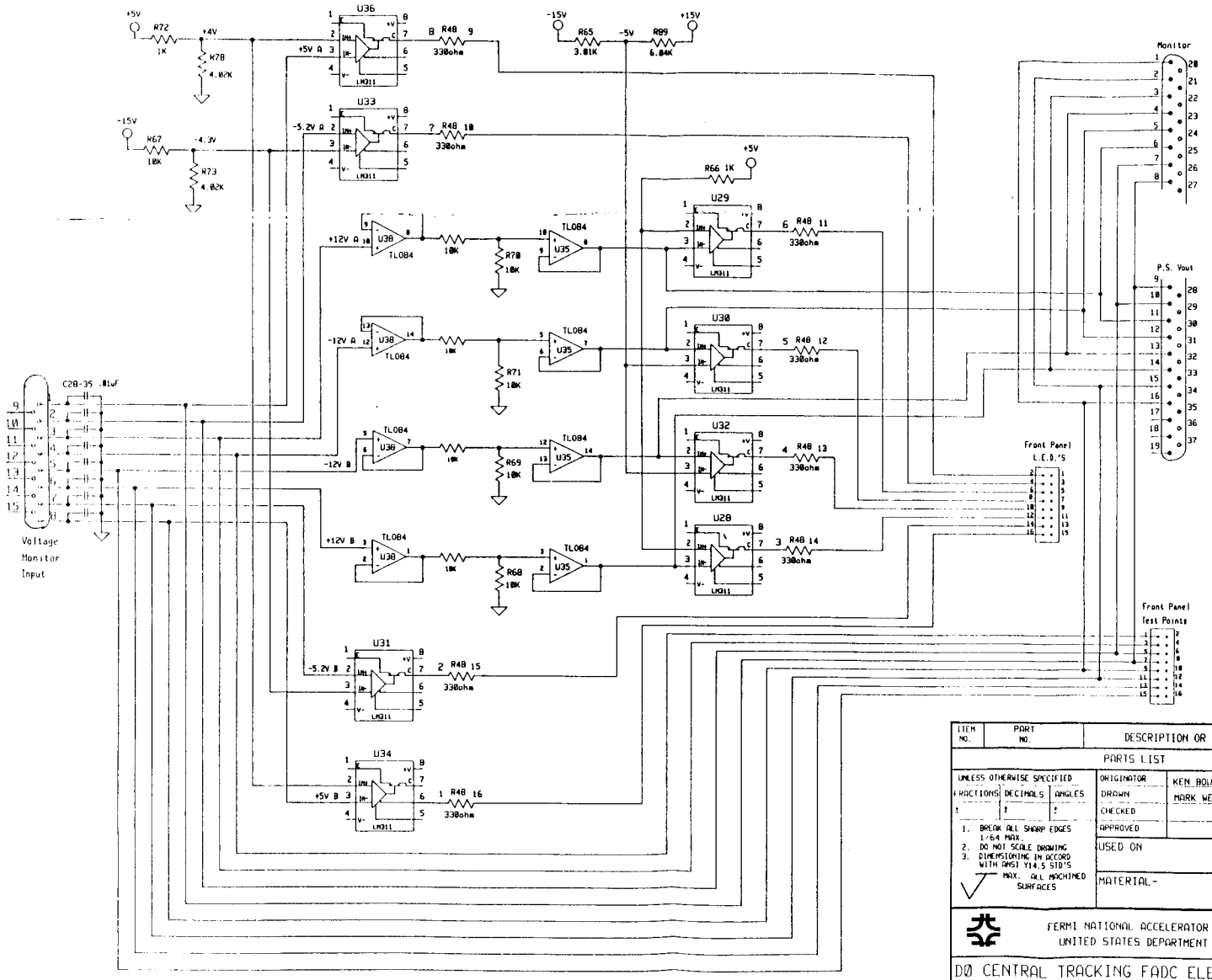

ITEM NO.	PART NO.	DESCRIPTION OR SIZE	QTY. REQ.
		PARTS LIST	

UNLESS OTHERWISE SPECIFIED				
FRACTIONS	DECIMALS	ANGLES	ORIGINATOR	KEN BOURKLAND 12-15-89
±	±	±	DRAWN	MARK WEZENSKY 12-15-89
			CHECKED	
			APPROVED	

1. BREAK ALL SHARP EDGES 1/64 MAX.
2. DO NOT SCALE DRAWING
3. DIMENSIONING IN ACCORD WITH ANSI Y14.5 STD'S

MAX. ALL MACHINED SURFACES

USED ON

MATERIAL-

FERMI NATIONAL ACCELERATOR LABORATORY
UNITED STATES DEPARTMENT OF ENERGY

DØ CENTRAL TRACKING FADC ELECTRONICS
RACK PROTECTION INTERFACE CHASSIS
VOLTAGE MONITOR

SCALE	FILMED	DRAWING NUMBER	REV.
		3740.411-EC-278999	C

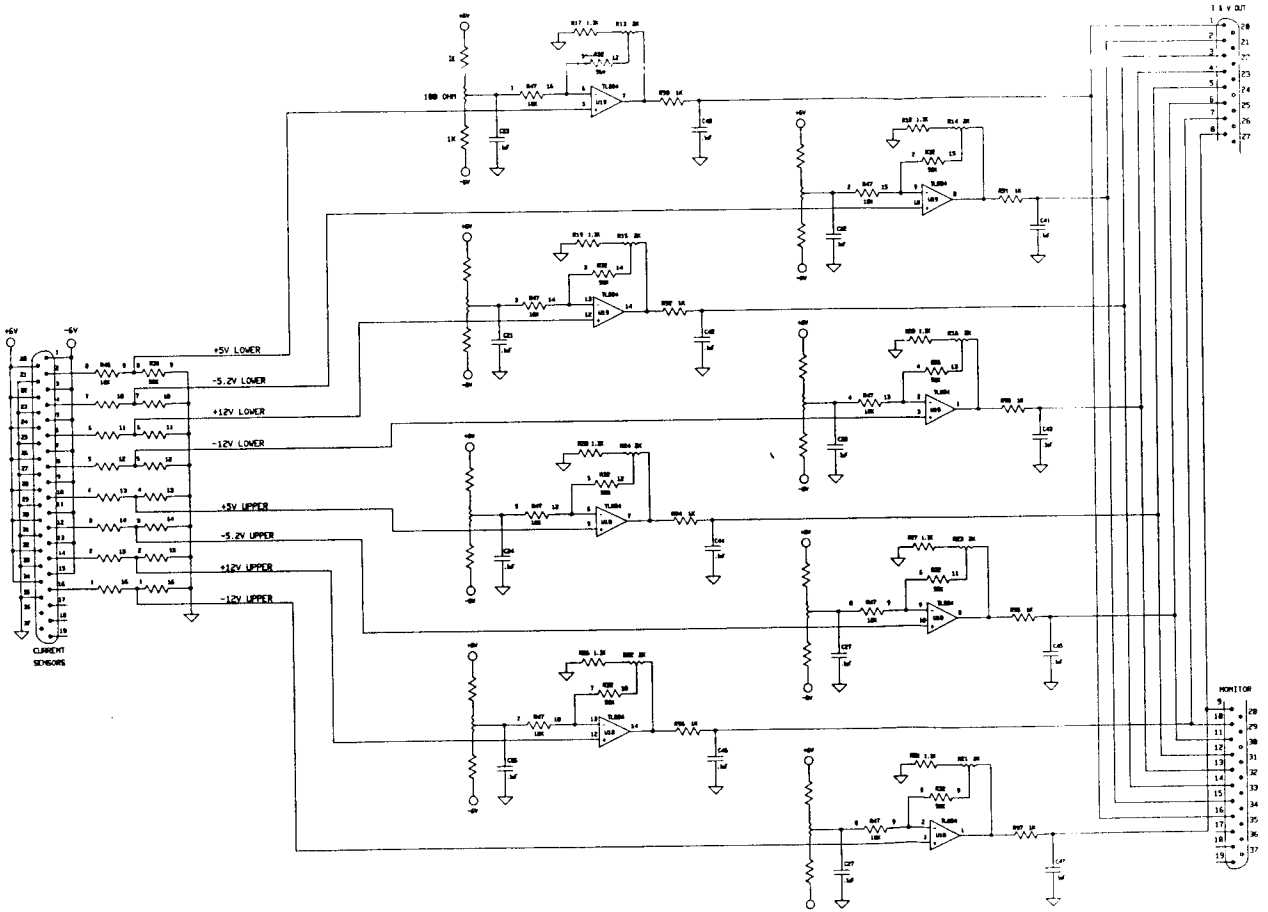

NOTE: 200 Amp Sensor circuits are set for an output of 20A/V
20 Amp Sensor circuits are set for an output of 2A/V

ITEM NO	PART NO.	DESCRIPTION OR SIZE	QTY. REQ.
		PARTS LIST	

UNLESS OTHERWISE SPECIFIED		ORIGINATOR	KEN BOURKLAND	12-15-89
FRACTIONS	DECIMALS	ANGLES	DRAWN	MARK WEZENSKY	06-18-90
±	±	±	CHECKED		
			APPROVED		

1. BREAK ALL SHARP EDGES 1/64 MAX
2. DO NOT SCALE DRAWING
3. DIMENSIONING IN ACCORD WITH ANSI Y14.5 STD'S

MAX. ALL MACHINED SURFACES

USED ON

MATERIAL-

FERMI NATIONAL ACCELERATOR LABORATORY
UNITED STATES DEPARTMENT OF ENERGY

D0 CENTRAL TRACKING FADC ELECTRONICS
RACK PROTECTION INTERFACE CHASSIS
CURRENT SENSORS

SCALE	FILMED	DRAWING NUMBER	REV.
		2740 411 ED 220997	C

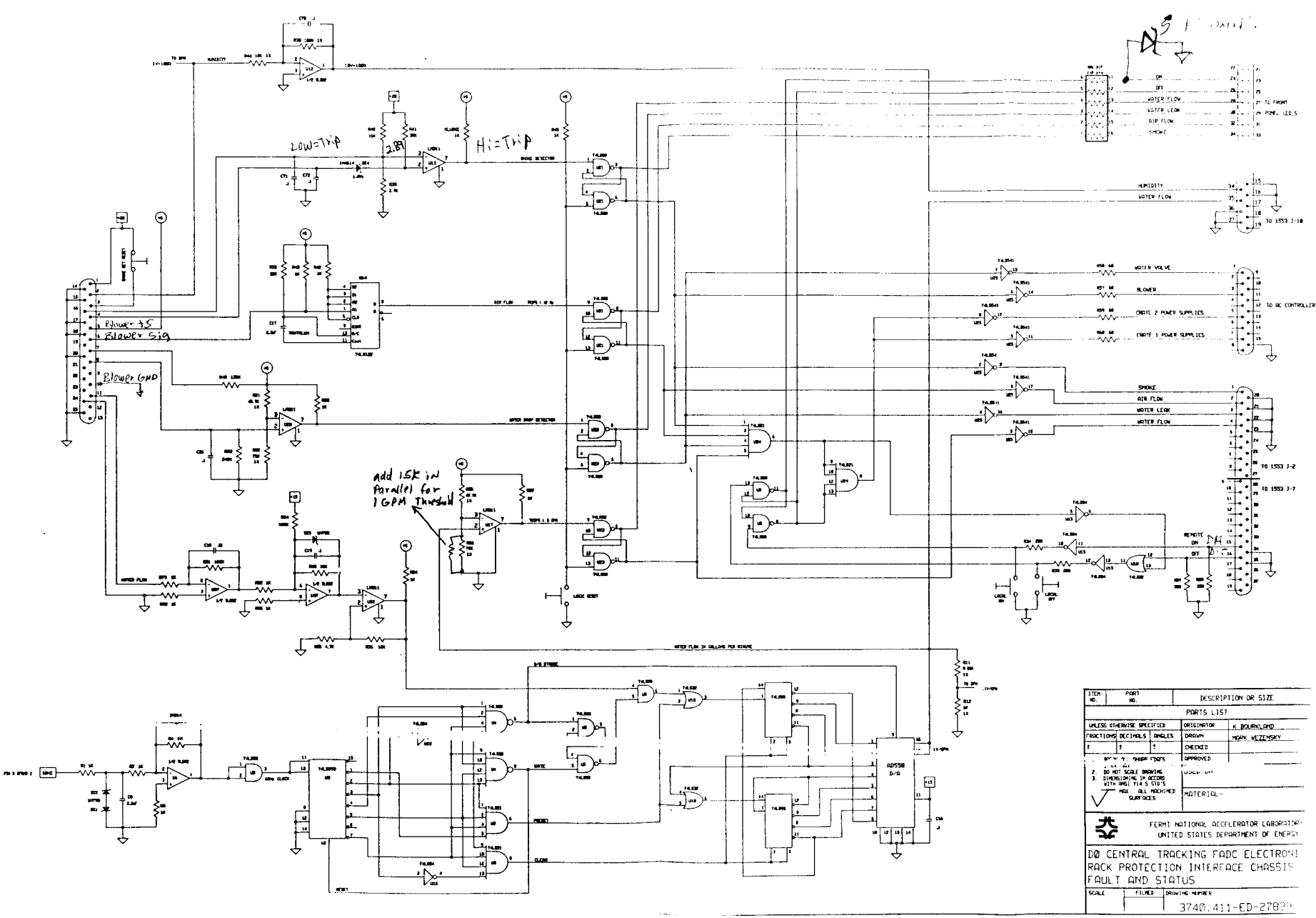

LOW=Trip
Hi=Trip
2.89
Blower +5
Blower Sig
Blower GND
add 15K in Parallel for 1GPM Threshold
ON
OFF
WATER FLOW
WATER LEAK
AIR FLOW
SMOKE
TO FRONT PANEL LED.S
HUMIDITY
WATER FLOW
TO 1553 J-10
WATER VALVE
BLOWER
CRATE 2 POWER SUPPLIES
CRATE 1 POWER SUPPLIES
TO AC CONTROLLER
SMOKE
AIR FLOW
WATER LEAK
WATER FLOW
TO 1553 J-2
TO 1553 J-7
REMOTE
ON
OFF
WATER FLOW IN GALLONS PER MINUTE
AD550 D/A
ITEM NO.
PART NO.
DESCRIPTION OR SIZE
PARTS LIST
UNLESS OTHERWISE SPECIFIED
FRACTIONS
DECIMALS
ANGLES
ORIGINATOR
K BOURKLAND
DRAWN
MARK WEZENSKY
CHECKED
APPROVED
2. DO NOT SCALE DRAWING
3. DIMENSIONING IN ACCORD WITH ANSI Y14.5 STD'S
MAX. ALL MACHINED SURFACES
MATERIAL-
FERMI NATIONAL ACCELERATOR LABORATORY
UNITED STATES DEPARTMENT OF ENERGY
DØ CENTRAL TRACKING FADC ELECTRONI
RACK PROTECTION INTERFACE CHASSIS
FAULT AND STATUS
SCALE
FILMED
DRAWING NUMBER
3740.411-ED-278

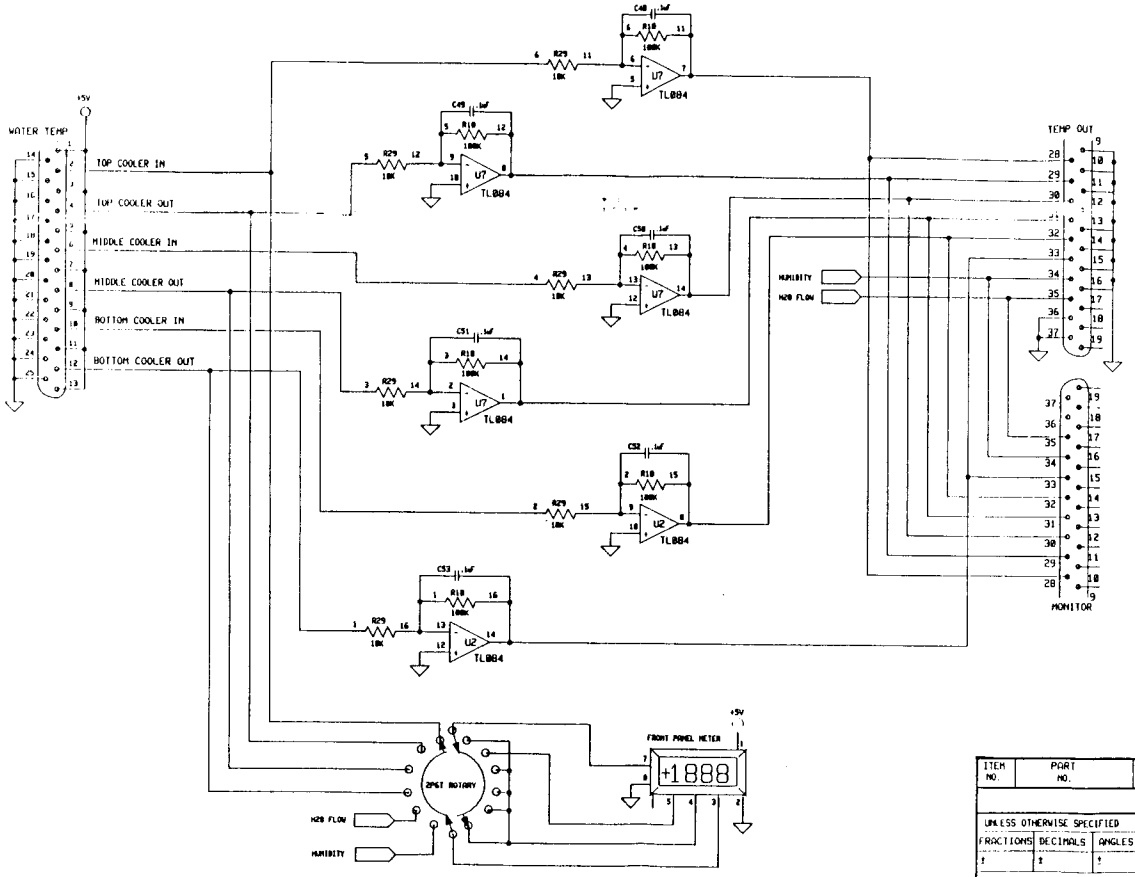

ITEM NO.	PART NO.	DESCRIPTION OR SIZE	QTY. REQ.

PARTS LIST

UNLESS OTHERWISE SPECIFIED			ORIGINATOR	KEN BOURKLAND	12-15-89
FRACTIONS	DECIMALS	ANGLES	DRAWN	MARK WEZEMSKY	12-15-89
±	±	±	CHECKED		
			APPROVED		

1. BREAK ALL SHARP EDGES 1/64 MAX.
2. DO NOT SCALE DRAWING
3. DIMENSIONING IN ACCORD WITH ANSI Y14.5 STD'S

√ MAX. ALL MACHINED SURFACES

USED ON

MATERIAL-

FERMI NATIONAL ACCELERATOR LABORATORY
UNITED STATES DEPARTMENT OF ENERGY

DØ CENTRAL TRACKING FADC ELECTRONICS
RACK PROTECTION INTERFACE CHASSIS
WATER TEMP. AND FRONT PANEL METER

SCALE	FILMED	DRAWING NUMBER	REV.
		3740.411-EC-278996	B

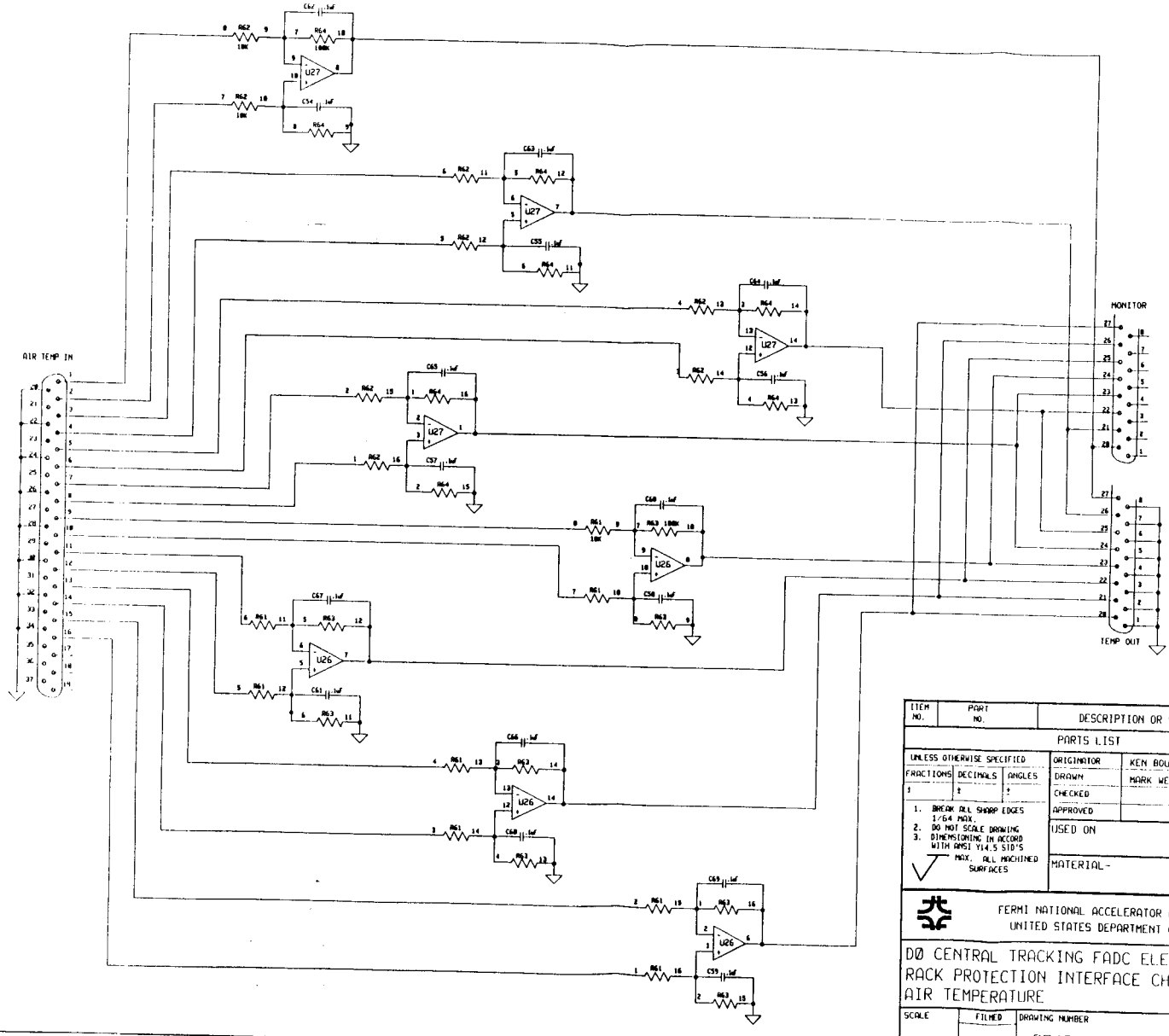

ITEM NO.	PART NO.	DESCRIPTION OR SIZE	QTY. REQ.

PARTS LIST

UNLESS OTHERWISE SPECIFIED					
FRACTIONS	DECIMALS	ANGLES	ORIGINATOR	KEN BOURKLAND	12-15-89
±	±	±	DRAWN	MARK WEZENSKY	12-15-89
			CHECKED		
			APPROVED		

1. BREAK ALL SHARP EDGES 1/64 MAX.
2. DO NOT SCALE DRAWING
3. DIMENSIONING IN ACCORD WITH ANSI Y14.5 STD'S

MAX. ALL MACHINED SURFACES

USED ON

MATERIAL-

FERMI NATIONAL ACCELERATOR LABORATORY
UNITED STATES DEPARTMENT OF ENERGY

DØ CENTRAL TRACKING FADC ELECTRONICS
RACK PROTECTION INTERFACE CHASSIS
AIR TEMPERATURE

SCALE	FILMED	DRAWING NUMBER	REV.
		3740.411-EC-278995	NONE

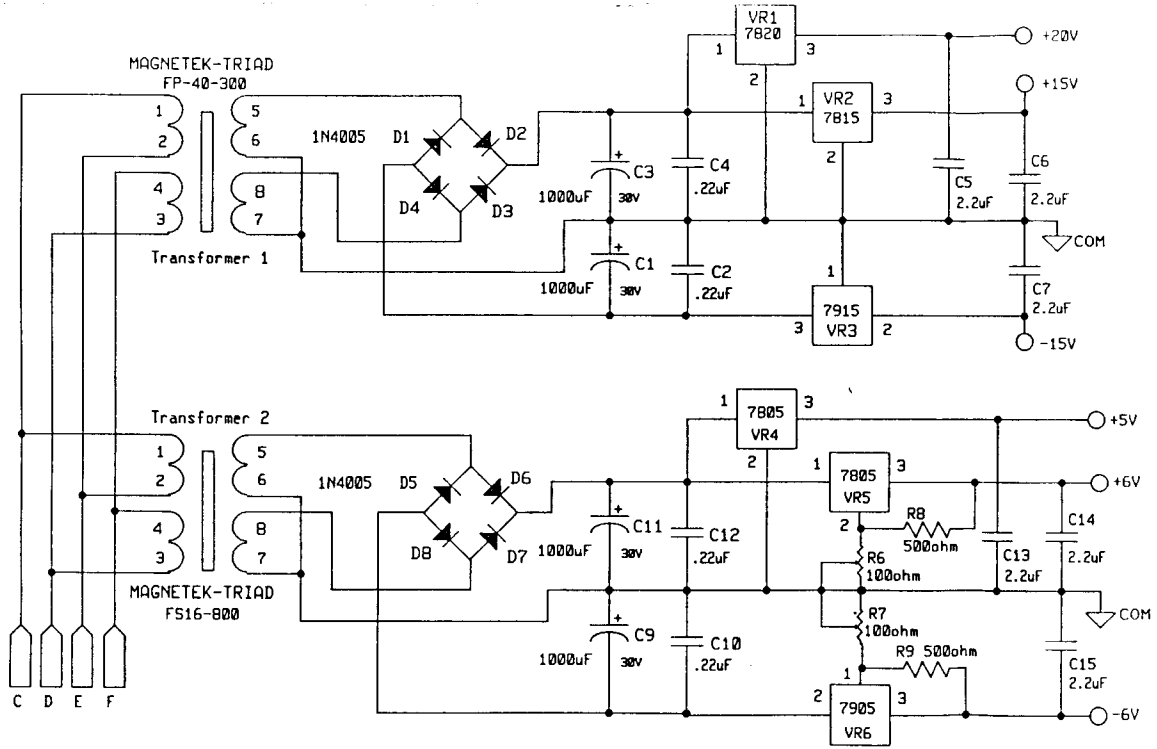

ITEM NO.	PART NO.	DESCRIPTION OR SIZE	QTY. REQ.

PARTS LIST

UNLESS OTHERWISE SPECIFIED			ORIGINATOR	KEN BOURKLAND	12-15-89
FRACTIONS	DECIMALS	ANGLES	DRAWN	MARK WEZENSKY	12-15-89
±	±	±	CHECKED		
			APPROVED		

1. BREAK ALL SHARP EDGES 1/64 MAX.
2. DO NOT SCALE DRAWING
3. DIMENSIONING IN ACCORD WITH ANSI Y14.5 STD'S

MAX. ALL MACHINED SURFACES

USED ON

MATERIAL-

FERMI NATIONAL ACCELERATOR LABORATORY
UNITED STATES DEPARTMENT OF ENERGY

DØ CENTRAL TRACKING FADC ELECTRONICS
RACK PROTECTION INTERFACE CHASSIS
POWER SUPPLY

SCALE	FILMED	DRAWING NUMBER	REV.
		3740.411-EB-278994	C