PULSAR IIA PROTOTYPE

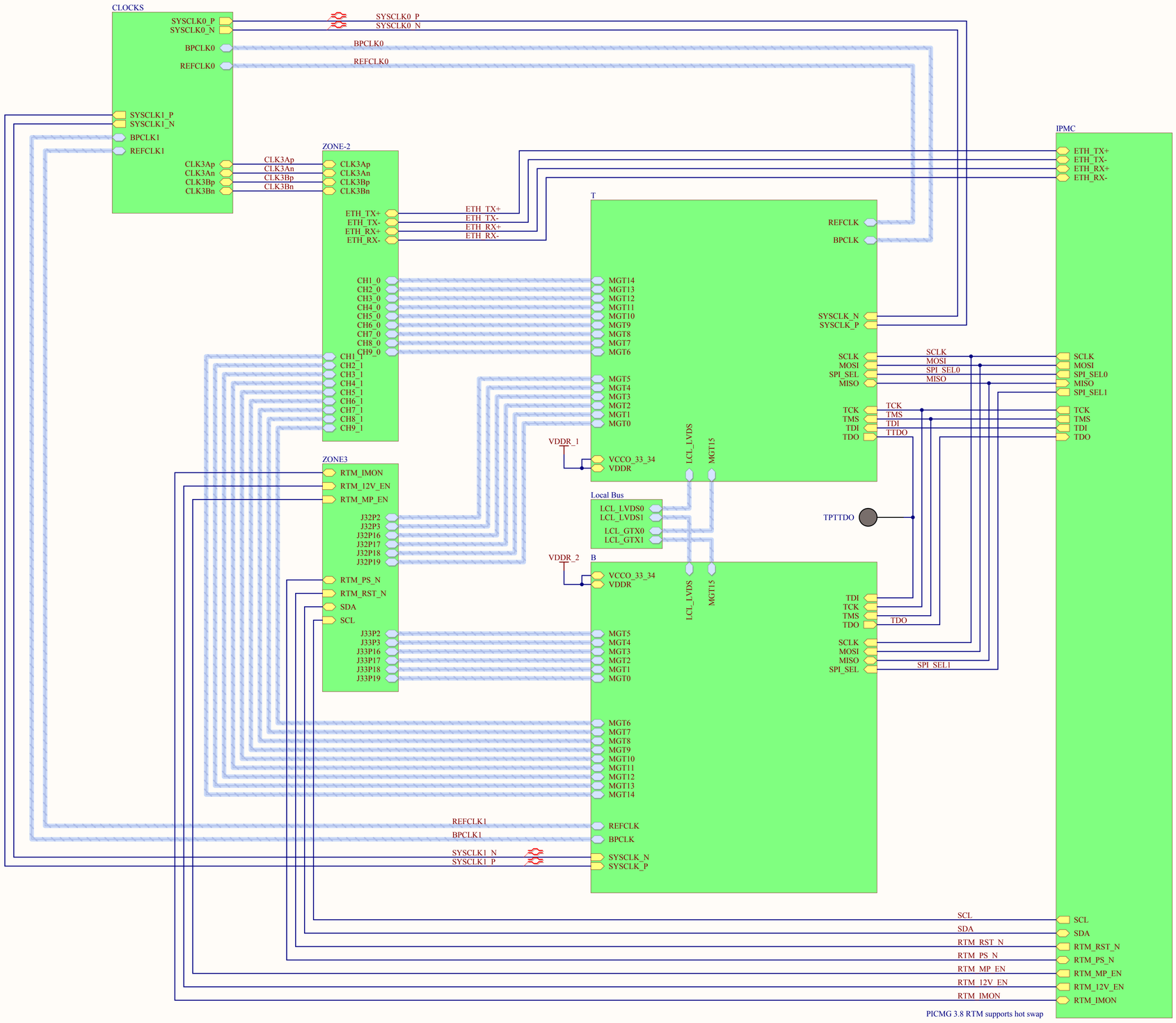

Fermilab
Fermi National Accelerator Laboratory
United States Department of Energy
PPD Electrical Engineering Department

Size	Rev			
C	*	Top Level		
Number 173843		Date: 11/28/2012 Time: 4:02:39 PM	Sheet 1 of 17	

ENGINEER: Jamieson Olsen
DRAWN: Jamieson Olsen
CHECKED: Yasuyuki Okumura
APPROVED: Ted Liu

C:\Users\Public\Documents\Altium\AD 10\Pulsar\TOP.SchDoc

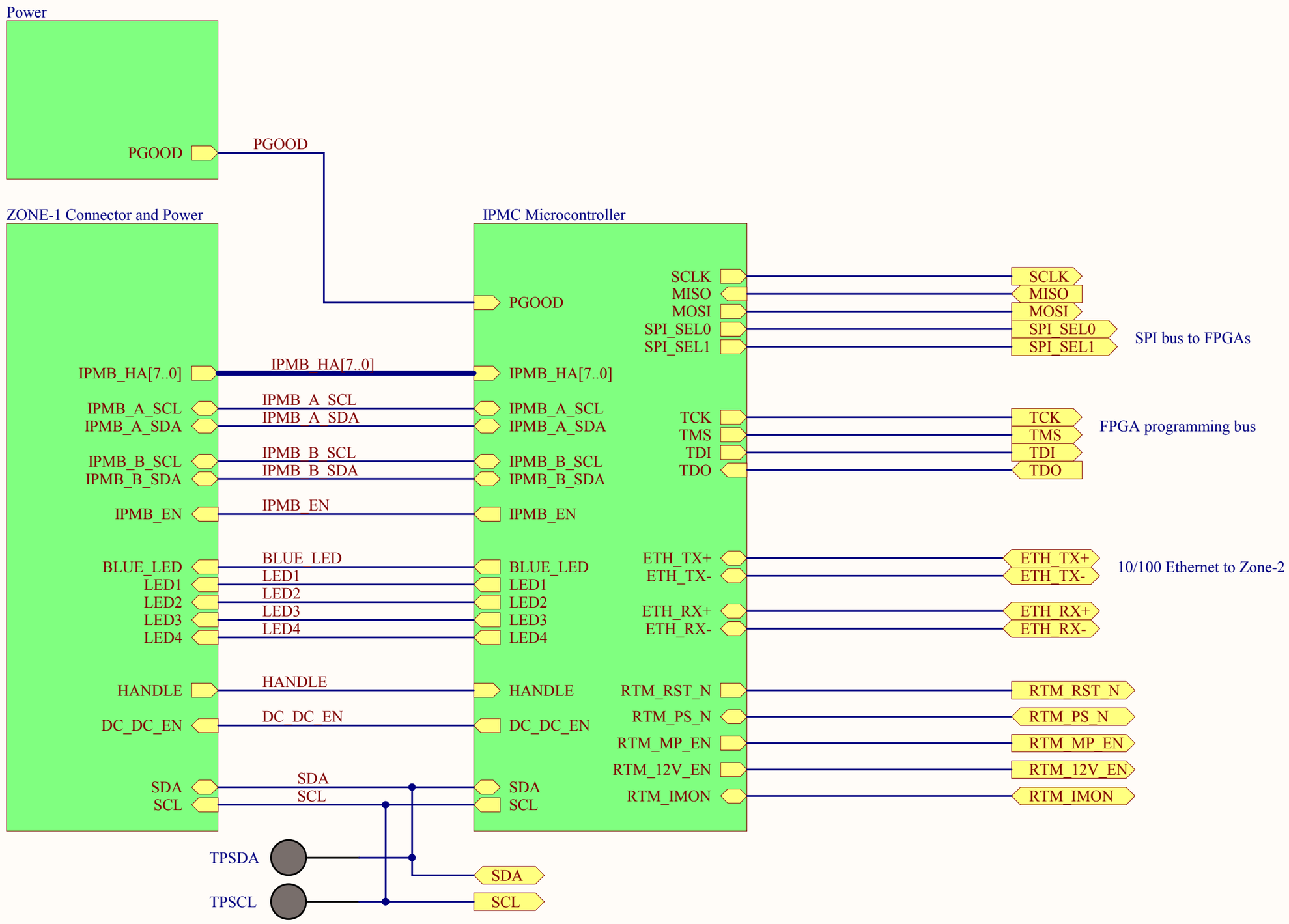

Fermi National Accelerator Laboratory
United States Department of Energy
PPD Electrical Engineering Department

Size	Rev	IPMC	ENGINEER: Jamieson Olsen
A	*		DRAWN: Jamieson Olsen
Number 173843	Date: 11/28/2012 Time: 4:02:39 PM	Sheet 2 of 17	CHECKED: Yasuyuki Okumura APPROVED: Ted Liu

C:\Users\Public\Documents\Altium\AD 10\Pulsar\IPMC.SchDoc

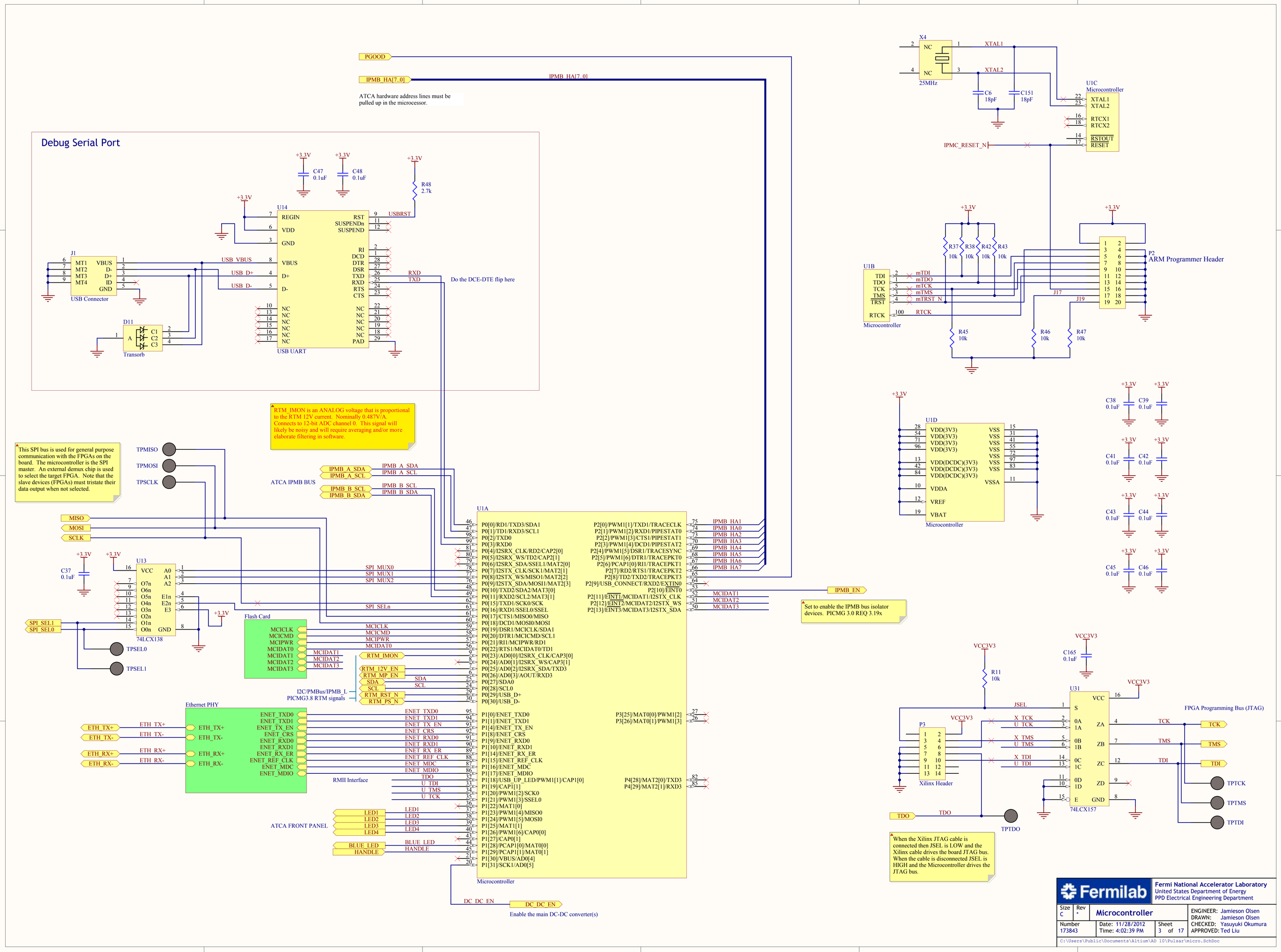
PGOOD
IPMB_HA[7..0]
ATCA hardware address lines must be pulled up in the microcessor.
Debug Serial Port
U14
USB UART
J1
USB Connector
D11
Transorb
C47 0.1uF
C48 0.1uF
R48 2.7k
USB_VBUS
USB_D+
USB_D-
USBRST
RXD
TXD
Do the DCE-DTE flip here
RTM_IMON is an ANALOG voltage that is proportional to the RTM 12V current. Nominally 0.487V/A. Connects to 12-bit ADC channel 0. This signal will likely be noisy and will require averaging and/or more elaborate filtering in software.
This SPI bus is used for general purpose communication with the FPGAs on the board. The microcontroller is the SPI master. An external demux chip is used to select the target FPGA. Note that the slave devices (FPGAs) must tristate their data output when not selected.
TPMISO
TPMOSI
TPSCLK
MISO
MOSI
SCLK
ATCA IPMB BUS
IPMB_A_SDA
IPMB_A_SCL
IPMB_B_SCL
IPMB_B_SDA
U13
74LCX138
C37 0.1uF
SPI_SEL1
SPI_SEL0
TPSEL0
TPSEL1
SPI_MUX0
SPI_MUX1
SPI_MUX2
SPI_SELn
Flash Card
MCICLK
MCICMD
MCIPWR
MCIDAT0
MCIDAT1
MCIDAT2
MCIDAT3
RTM_IMON
RTM_12V_EN
RTM_MP_EN
SDA
SCL
RTM_RST_N
RTM_PS_N
I2C/PMBus/IPMB_L
PICMG3.8 RTM signals
Ethernet PHY
ETH_TX+
ETH_TX-
ETH_RX+
ETH_RX-
ENET_TXD0
ENET_TXD1
ENET_TX_EN
ENET_CRS
ENET_RXD0
ENET_RXD1
ENET_RX_ER
ENET_REF_CLK
ENET_MDC
ENET_MDIO
RMII Interface
TDO
U_TDI
U_TMS
U_TCK
ATCA FRONT PANEL
LED1
LED2
LED3
LED4
BLUE_LED
HANDLE
U1A
Microcontroller
IPMB_HA1
IPMB_HA0
IPMB_HA2
IPMB_HA3
IPMB_HA4
IPMB_HA5
IPMB_HA6
IPMB_HA7
IPMB_EN
Set to enable the IPMB bus isolator devices. PICMG 3.0 REQ 3.19x
MCIDAT1
MCIDAT2
MCIDAT3
DC_DC_EN
Enable the main DC-DC converter(s)
X4
25MHz
XTAL1
XTAL2
C6 18pF
C151 18pF
U1C
Microcontroller
IPMC_RESET_N
R37 10k
R38 10k
R42 10k
R43 10k
U1B
Microcontroller
mTDI
mTDO
mTCK
mTMS
mTRST_N
RTCK
R45 10k
R46 10k
R47 10k
P2
ARM Programmer Header
J17
J19
U1D
Microcontroller
C38 0.1uF
C39 0.1uF
C41 0.1uF
C42 0.1uF
C43 0.1uF
C44 0.1uF
C45 0.1uF
C46 0.1uF
VCC3V3
R11 10k
C165 0.1uF
U31
74LCX157
JSEL
X_TCK
U_TCK
X_TMS
U_TMS
X_TDI
U_TDI
P3
Xilinx Header
TPTDO
When the Xilinx JTAG cable is connected then JSEL is LOW and the Xilinx cable drives the board JTAG bus. When the cable is disconnected JSEL is HIGH and the Microcontroller drives the JTAG bus.
FPGA Programming Bus (JTAG)
TCK
TMS
TDI
TPTCK
TPTMS
TPTDI
Fermilab
Fermi National Accelerator Laboratory
United States Department of Energy
PPD Electrical Engineering Department
Size C
Rev *
Microcontroller
Number 173843
Date: 11/28/2012
Time: 4:02:39 PM
Sheet 3 of 17
ENGINEER: Jamieson Olsen
DRAWN: Jamieson Olsen
CHECKED: Yasuyuki Okumura
APPROVED: Ted Liu
C:\Users\Public\Documents\Altium\AD 10\Pulsar\micro.SchDoc

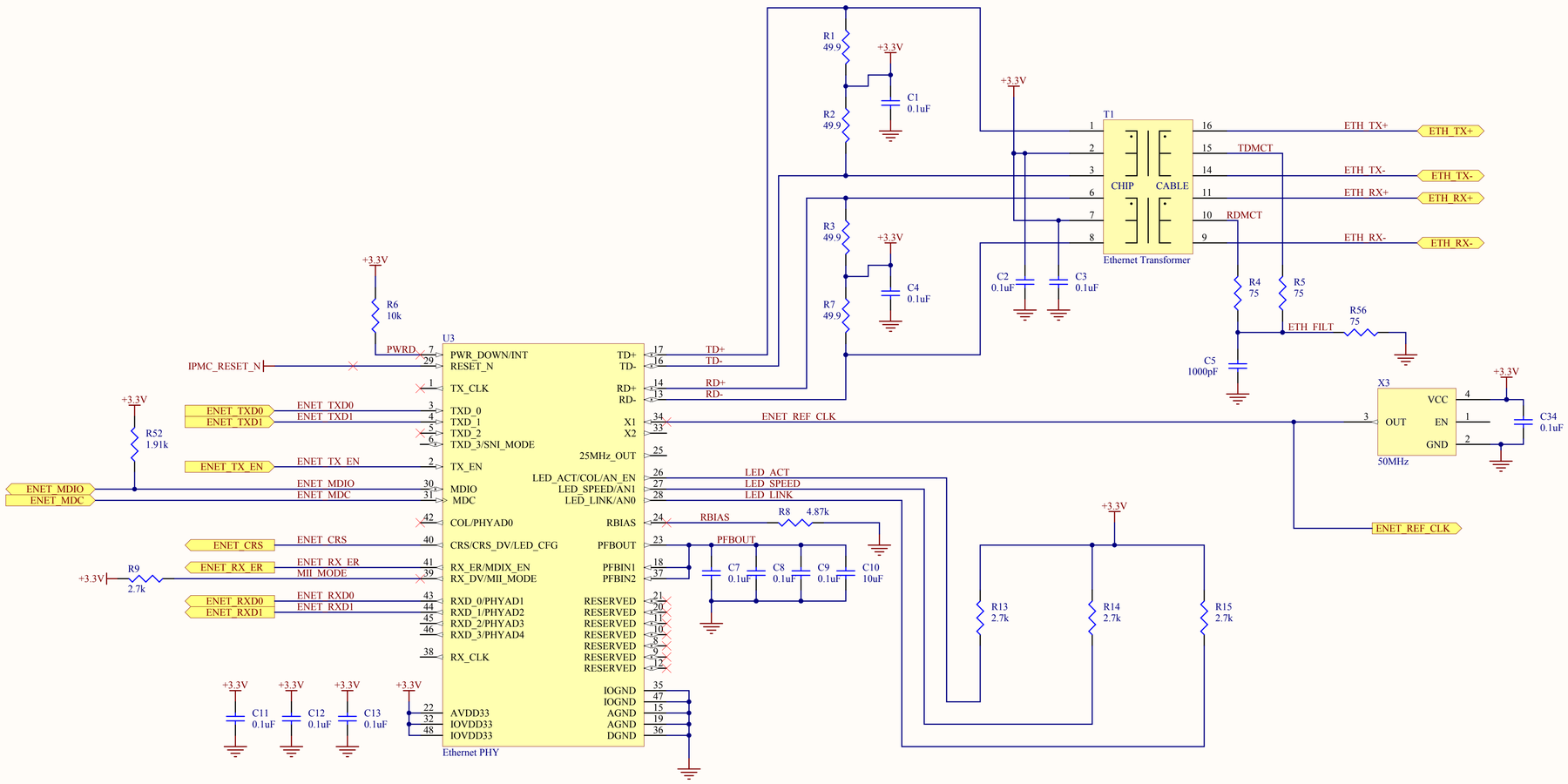

10/100 Ethernet PHY

RMII mode, 50MHz clock common to both PHY and Microcontroller.

MDC/MDIO Management Interface Address is 0x01

Strapping Options: AN_EN = 1, AN1=1, AN0=1, SNI_MODE=0 (internal pulldown on SNI_MODE) which means RMII Mode, 10/100 AutoNeg, and Full/Half Duplex.

Fermilab

Fermi National Accelerator Laboratory
United States Department of Energy
PPD Electrical Engineering Department

Size C	Rev *	Ethernet	ENGINEER: Jamieson Olsen DRAWN: Jamieson Olsen CHECKED: Yasuyuki Okumura APPROVED: Ted Liu
Number 173843	Date: 11/28/2012 Time: 4:02:40 PM	Sheet 4 of 17	

C:\Users\Public\Documents\Altium\AD 10\Pulsar\Ethernet.SchDoc

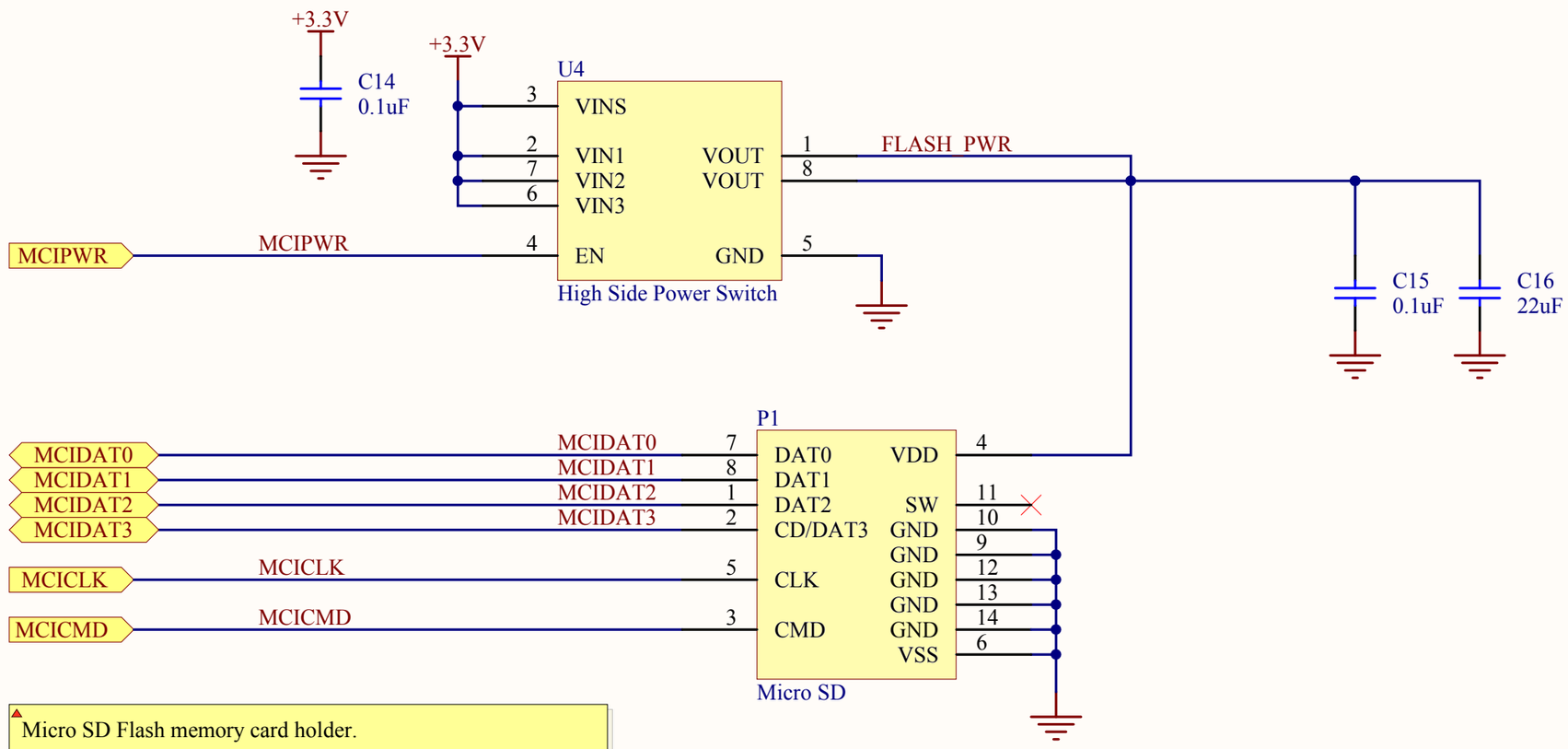

Micro SD Flash memory card holder.

Use nibble wide interface (MMC) for highest throughput. This flash memory is used for FPGA firmware images and is controlled by the IPMC microcontroller.

SD cards have no reset line so therefore the microcontroller needs the ability to power cycle the card using the high side power switch.

Holder is Molex 502774-0891 or equivalent. Mount this to the "solder" side of the ATCA board near the front panel.

Fermilab	Fermi National Accelerator Laboratory United States Department of Energy PPD Electrical Engineering Department		
Size A	Rev *	Flash Card	ENGINEER: Jamieson Olsen DRAWN: Jamieson Olsen
Number 173843	Date: 11/28/2012 Time: 4:02:40 PM	Sheet 5 of 17	CHECKED: Yasuyuki Okumura APPROVED: Ted Liu
C:\Users\Public\Documents\Altium\AD 10\Pulsar\Flash.SchDoc			

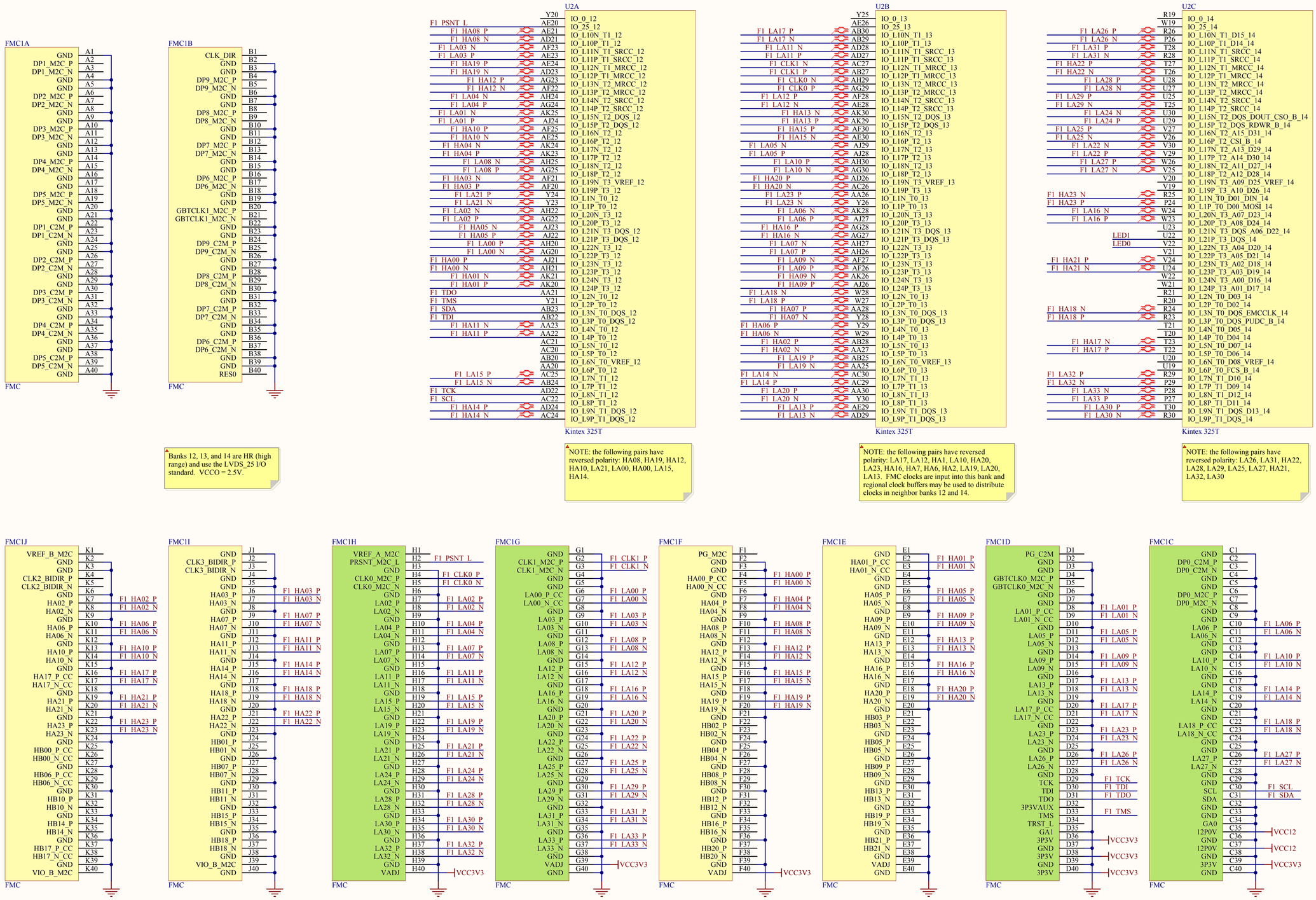

Banks 12, 13, and 14 are HR (high range) and use the LVDS_25 I/O standard. VCCO = 2.5V.

NOTE: the following pairs have reversed polarity: HA08, HA19, HA12, HA10, LA21, LA00, HA00, LA15, HA14.

NOTE: the following pairs have reversed polarity: LA17, LA12, HA1, LA10, HA20, LA23, HA16, HA7, HA6, HA2, LA19, LA20, LA13. FMC clocks are input into this bank and regional clock buffers may be used to distribute clocks in neighbor banks 12 and 14.

NOTE: the following pairs have reversed polarity: LA26, LA31, HA22, LA28, LA29, LA25, LA27, HA21, LA32, LA30

Fermilab	Fermi National Accelerator Laboratory United States Department of Energy PPD Electrical Engineering Department
Size C / Rev *	FMC1 BANKS 12 13 14
Number 173843	Date: 11/28/2012 Time: 4:02:40 PM Sheet 6 of 17
ENGINEER: Jamieson Olsen DRAWN: Jamieson Olsen CHECKED: Yasuyuki Okumura APPROVED: Ted Liu	

C:\Users\Public\Documents\Altium\AD 10\Pulsar\FMC1.SchDoc

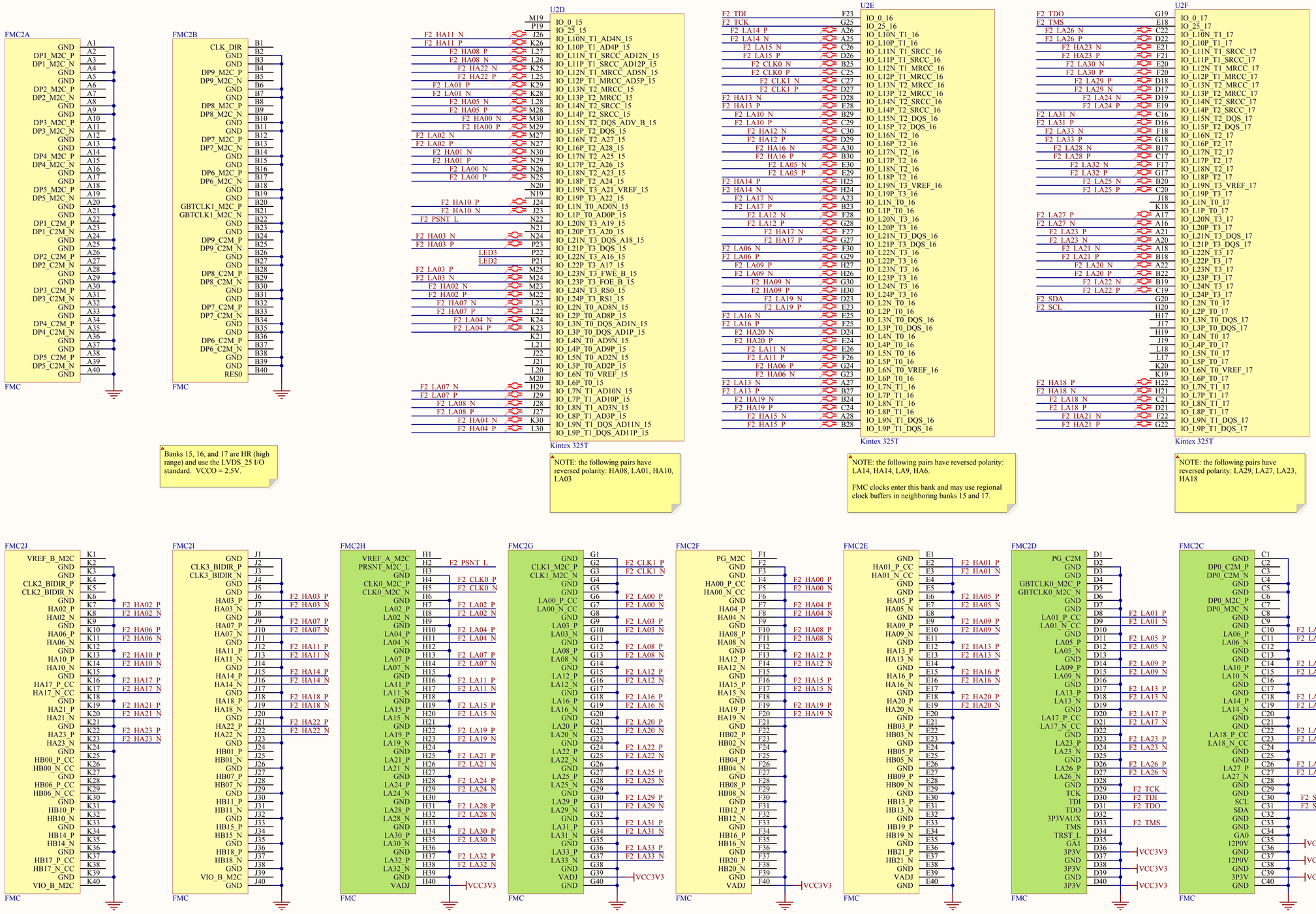

Fermilab
Fermi National Accelerator Laboratory
United States Department of Energy
PPD Electrical Engineering Department

Size	Rev		
C	*	FMC2 Banks 15 16 17	
Number 173843	Date: 11/28/2012 Time: 4:02:40 PM	Sheet 7 of 17	ENGINEER: Jamieson Olsen DRAWN: Jamieson Olsen CHECKED: Yasuyuki Okumura APPROVED: Ted Liu

C:\Users\Public\Documents\Altium\AD 10\Pulsar\FMC2.SchDoc

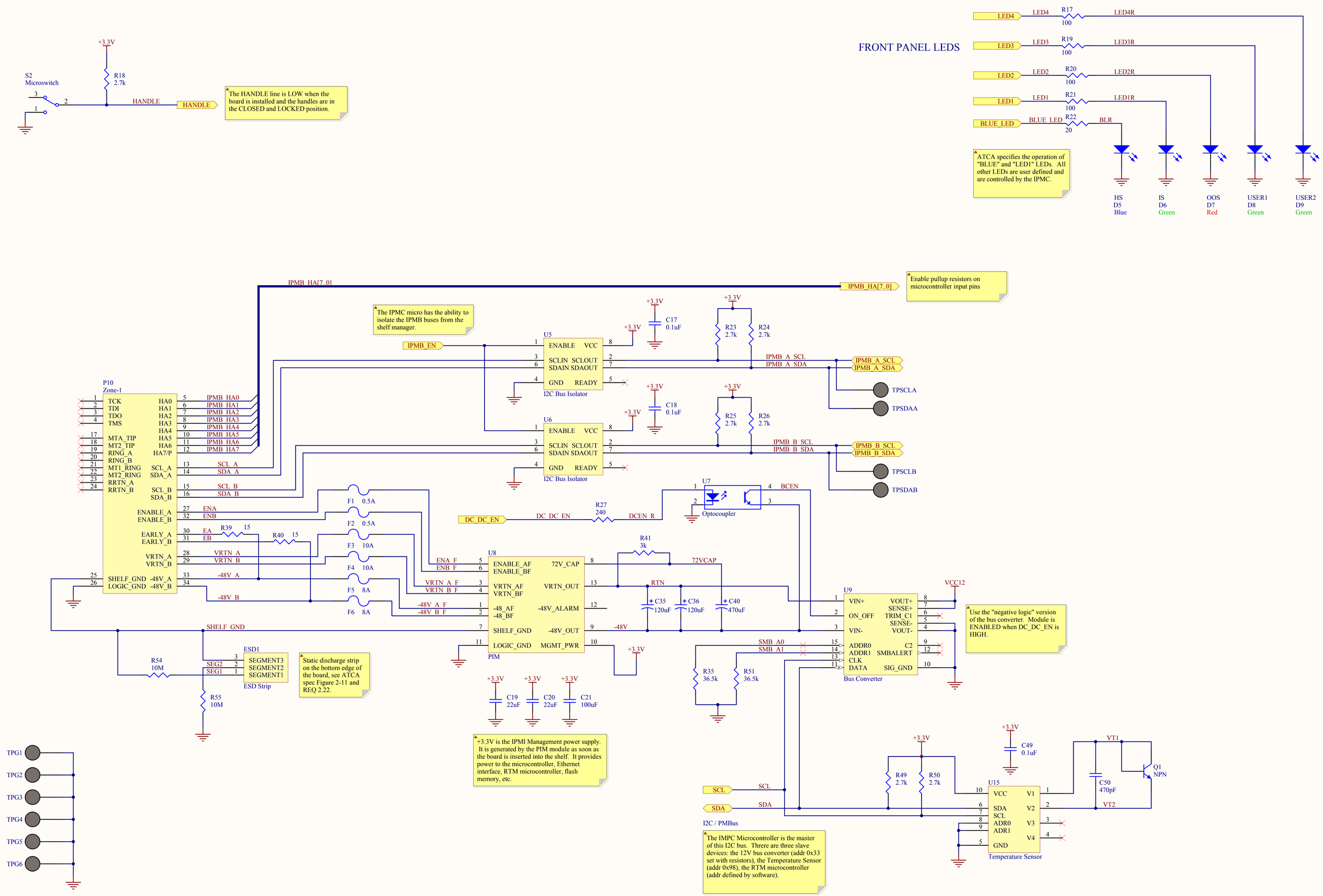

Fermilab
Fermi National Accelerator Laboratory
United States Department of Energy
PPD Electrical Engineering Department

Size	Rev	Zone-1 Connectors	ENGINEER: Jamieson Olsen
C	*		DRAWN: Jamieson Olsen
Number 173843	Date: 11/28/2012 Time: 4:02:40 PM	Sheet 8 of 17	CHECKED: Yasuyuki Okumura APPROVED: Ted Liu

C:\Users\Public\Documents\Altium\AD 10\Pulsar\Zone1.SchDoc

ATCA ZONE-2 FULL MESH

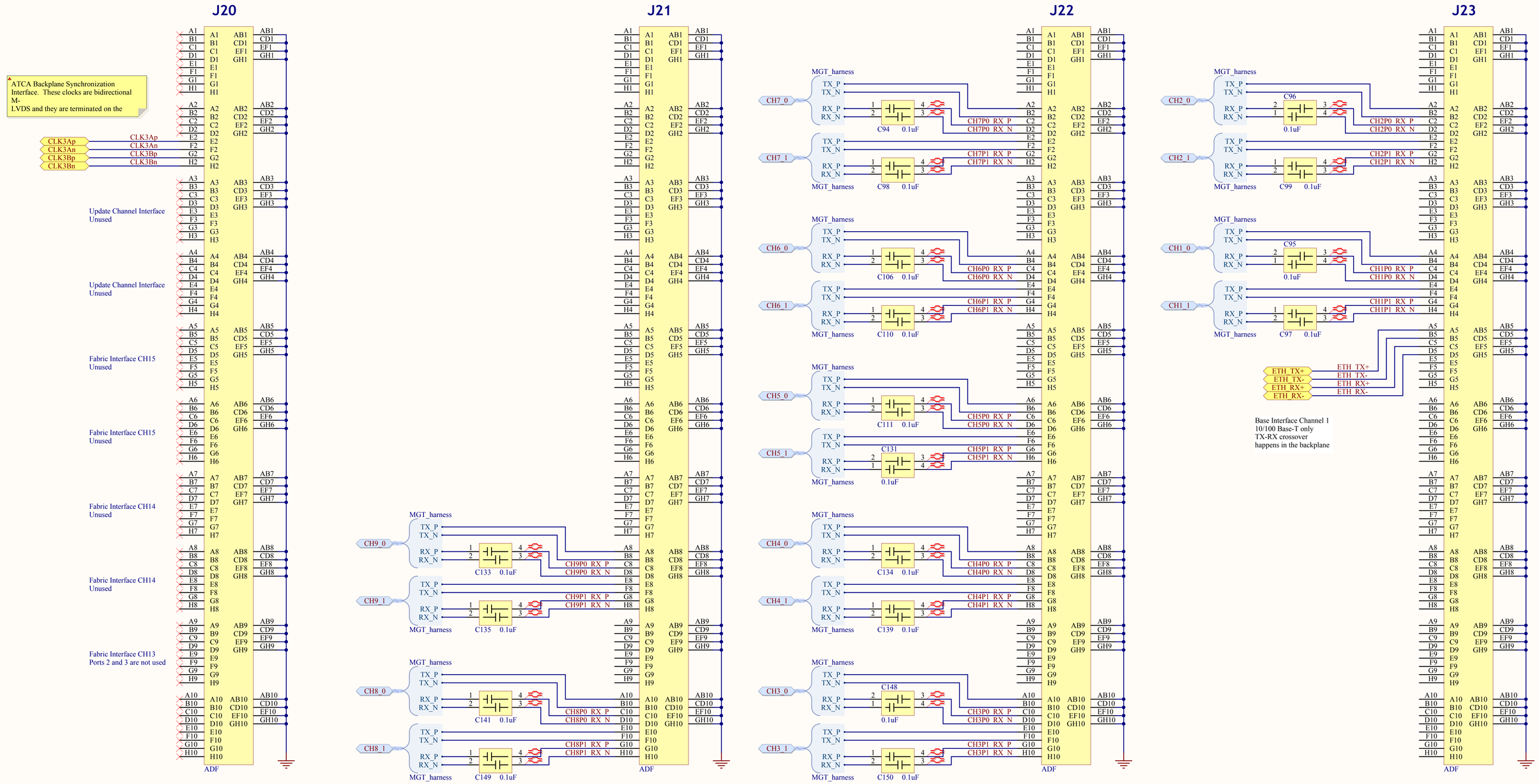

NOTES:

1. 14 slot FULL MESH configuration.
2. For each channel only ports 0 and 1 are used.
3. Base Interface is supported for port 1 only.
4. Connector J24 is not used.
5. Update Channel Interface is not used.

K2
ATCA Alignment Block

K1
ATCA Alignment Block

FP1
Front Panel

HD1
Handles

Fermilab
Fermi National Accelerator Laboratory
United States Department of Energy
PPD Electrical Engineering Department

Size	Rev	Zone-2 Connectors	ENGINEER: Jamieson Olsen
C	*		DRAWN: Jamieson Olsen
Number 173843	Date: 11/28/2012 Time: 4:02:41 PM	Sheet 9 of 17	CHECKED: Yasuyuki Okumura APPROVED: Ted Liu

C:\Users\Public\Documents\Altium\AD 10\Pulsar\Zone2.SchDoc

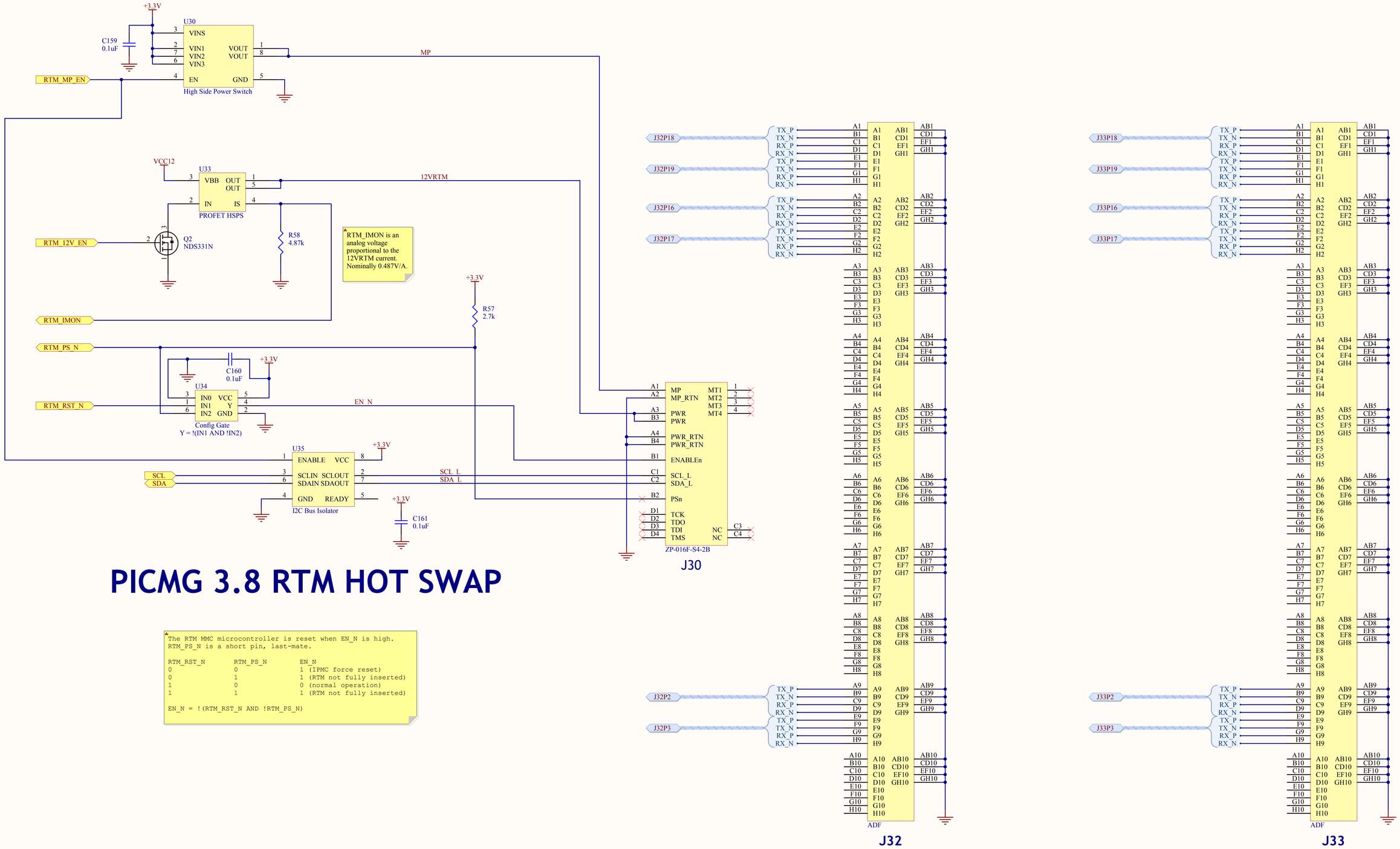

PICMG 3.8 RTM HOT SWAP

```
The RTM MMC microcontroller is reset when EN_N is high.
RTM_PS_N is a short pin, last-mate.

RTM_RST_N        RTM_PS_N         EN_N
0                0                1 (IPMC force reset)
0                1                1 (RTM not fully inserted)
1                0                0 (normal operation)
1                1                1 (RTM not fully inserted)

EN_N = !(RTM_RST_N AND !RTM_PS_N)
```

Fermilab
Fermi National Accelerator Laboratory
United States Department of Energy
PPD Electrical Engineering Department

Size	Rev	Zone-3 Connectors	ENGINEER: Jamieson Olsen
C	*		DRAWN: Jamieson Olsen
Number 173843	Date: 11/28/2012 Time: 4:02:41 PM	Sheet 10 of 17	CHECKED: Yasuyuki Okumura APPROVED: Ted Liu

C:\Users\Public\Documents\Altium\AD 10\Pulsar\Zone3.SchDoc

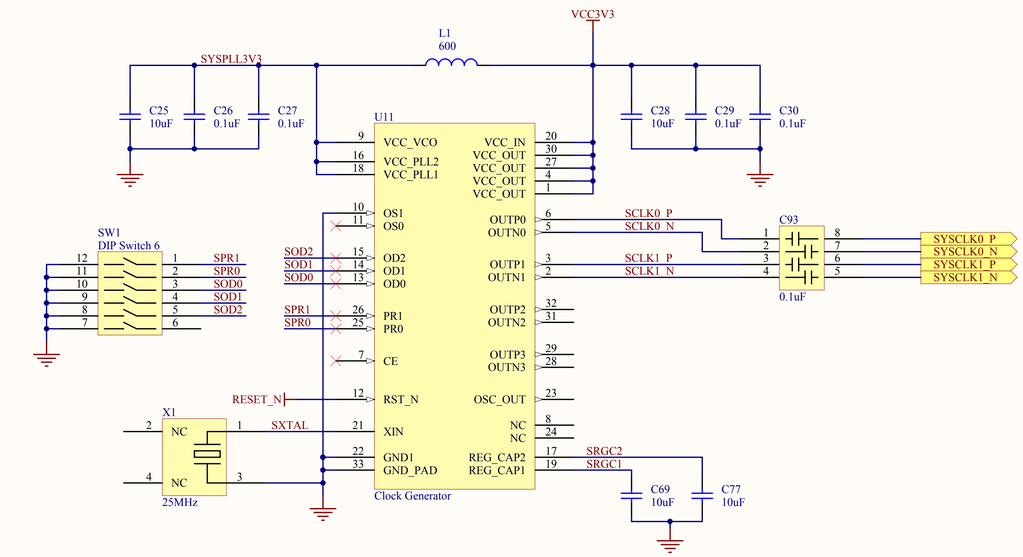

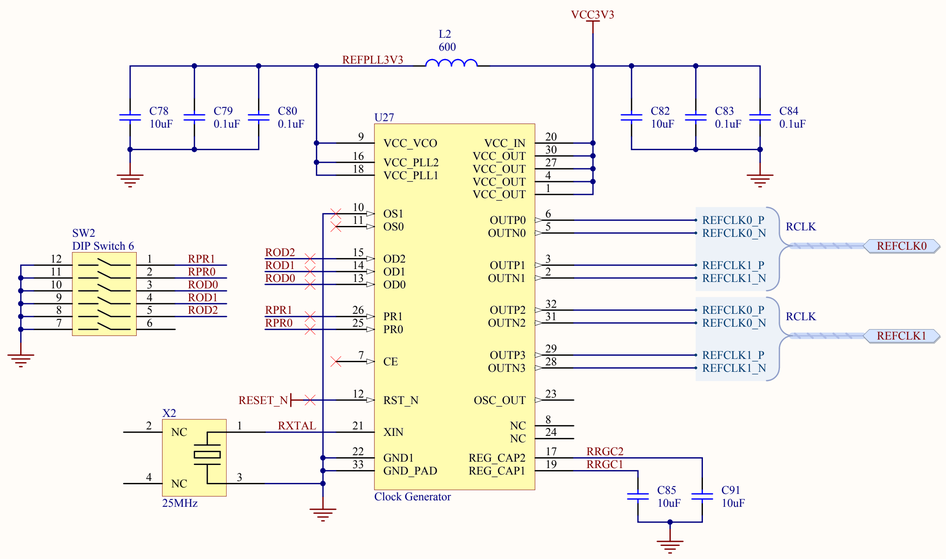

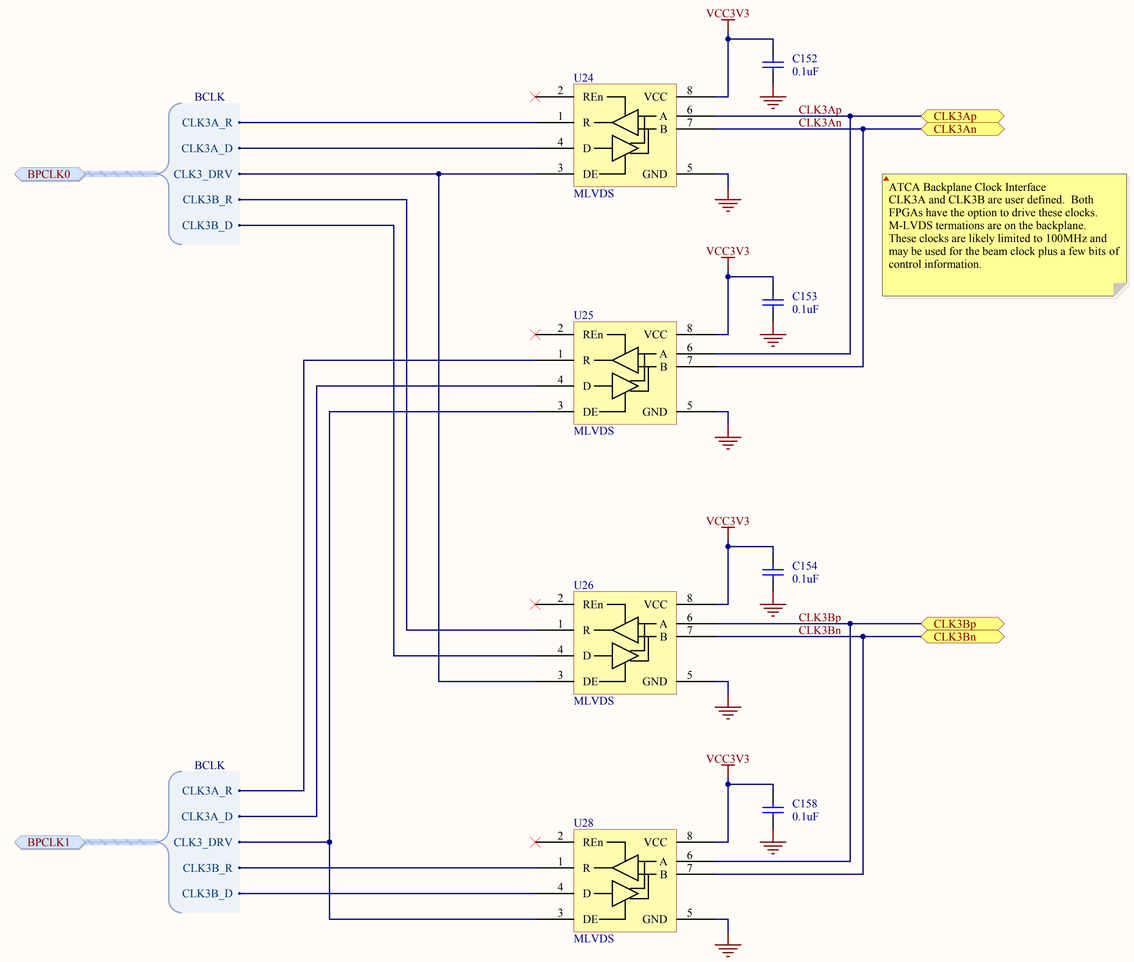

ATCA Backplane Clock Interface
CLK3A and CLK3B are user defined. Both FPGAs have the option to drive these clocks. M-LVDS termations are on the backplane. These clocks are likely limited to 100MHz and may be used for the beam clock plus a few bits of control information.

CLK3x_R_x signals should be terminated at the FPGA using parallel DCI 50 ohms. LVTTL signal levels and connect to FPGA bank 18 with VCCO = 3.3V

Fermilab	Fermi National Accelerator Laboratory United States Department of Energy PPD Electrical Engineering Department		
Size C	Rev *	Clocks	ENGINEER: Jamieson Olsen DRAWN: Jamieson Olsen CHECKED: Yasuyuki Okumura APPROVED: Ted Liu
Number 173843	Date: 11/28/2012 Time: 4:02:41 PM	Sheet 11 of 17	

C:\Users\Public\Documents\Altium\AD 10\Pulsar\Clocks.SchDoc

JTAG configuration mode M[2..0]=101 only. IPMC is the JTAG master. SPI is provided for post-init communication with IPMC.

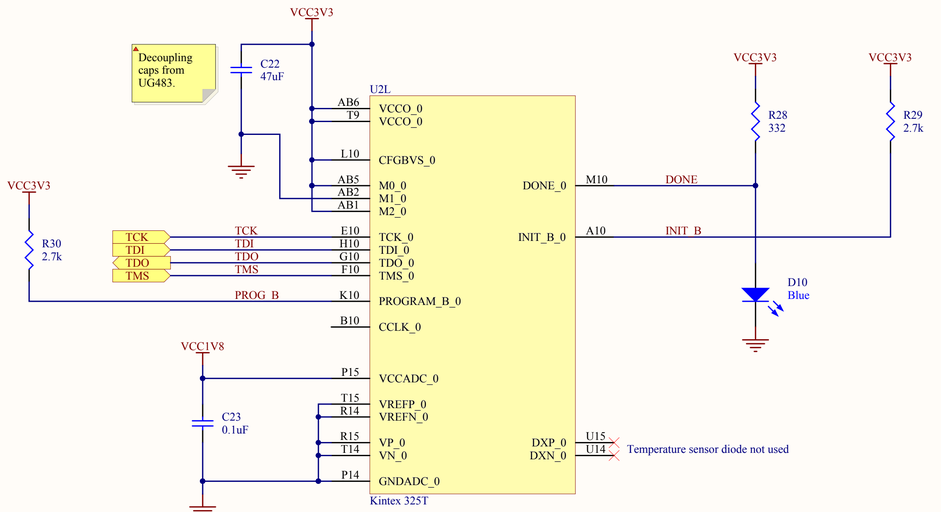

XADC uses internal reference and internal sensors only. UG480 Figure 6-1 for layout with minimal filtering.

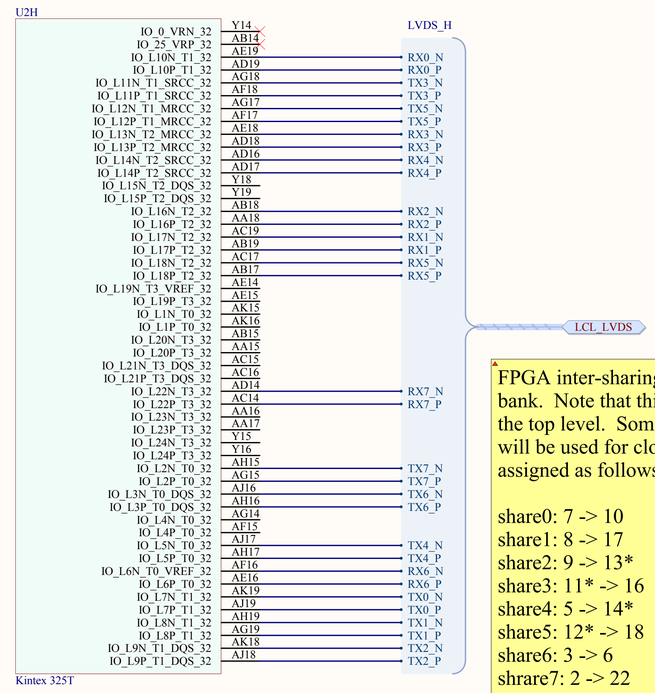

FPGA inter-sharing bus LVDS. HP I/O bank. Note that this bus needs to flip at the top level. Some of these signal pairs will be used for clocks. Bank 32 pairs assigned as follows:

share0: 7 -> 10
share1: 8 -> 17
share2: 9 -> 13*
share3: 11* -> 16
share4: 5 -> 14*
share5: 12* -> 18
share6: 3 -> 6
shrare7: 2 -> 22

* = clock capable pair

Max rate = 1.25Gbps per LVDS pair in Kintex -1 speed grade.

This is a HP (high performance bank) with VCCO=1.8 and the I/O Standard is LVDS (not LVDS_25).

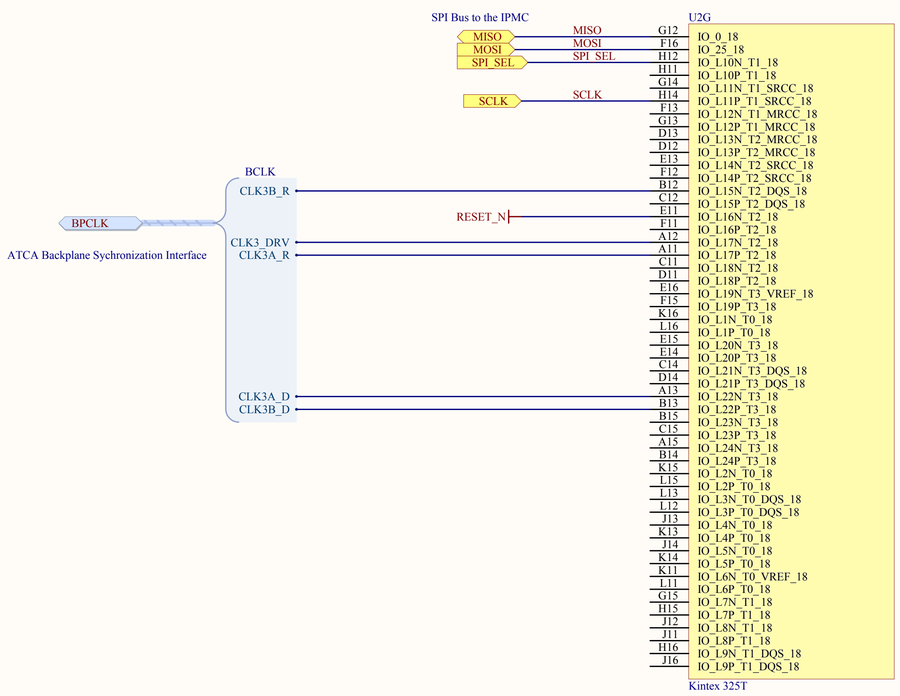

Bank 18 has VCCO=3.3V and used for general purpose I/O to IPMC, master clocks, and misc. signals

Fermilab	Fermi National Accelerator Laboratory United States Department of Energy PPD Electrical Engineering Department		
Size C	Rev *	FPGA CONFIG	ENGINEER: Jamieson Olsen DRAWN: Jamieson Olsen CHECKED: Yasuyuki Okumura APPROVED: Ted Liu
Number 173843	Date: 11/28/2012 Time: 4:02:41 PM	Sheet 12 of 17	

C:\Users\Public\Documents\Altium\AD 10\Pulsar\F_CFG.SchDoc

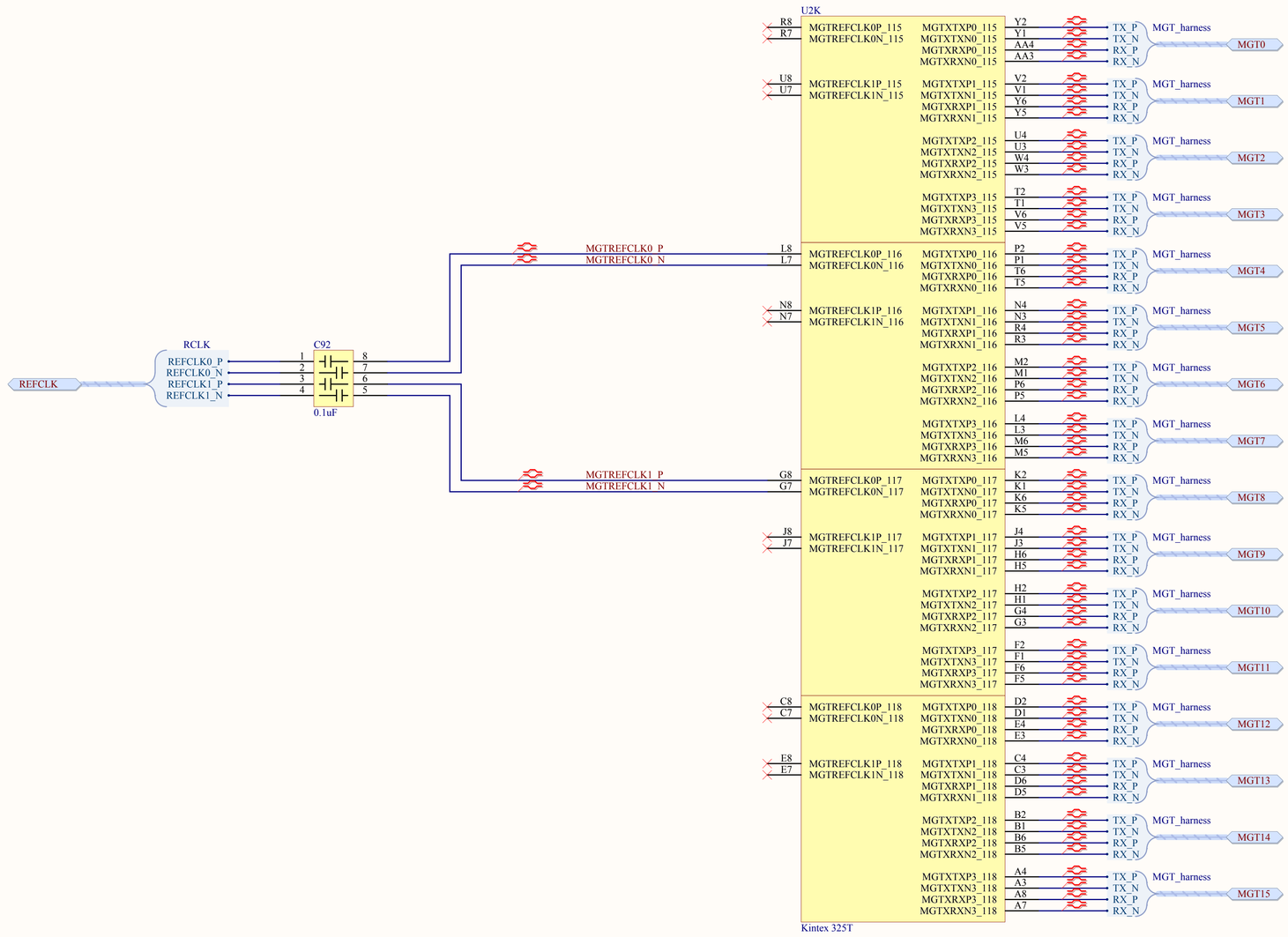

Fermilab
Fermi National Accelerator Laboratory
United States Department of Energy
PPD Electrical Engineering Department

Size	Rev	FPGA GTX		ENGINEER: Jamieson Olsen
C	*			DRAWN: Jamieson Olsen
Number 173843	Date: 11/28/2012 Time: 4:02:41 PM		Sheet 13 of 17	CHECKED: Yasuyuki Okumura APPROVED: Ted Liu

C:\Users\Public\Documents\Altium\AD 10\Pulsar\F_GTX.SchDoc

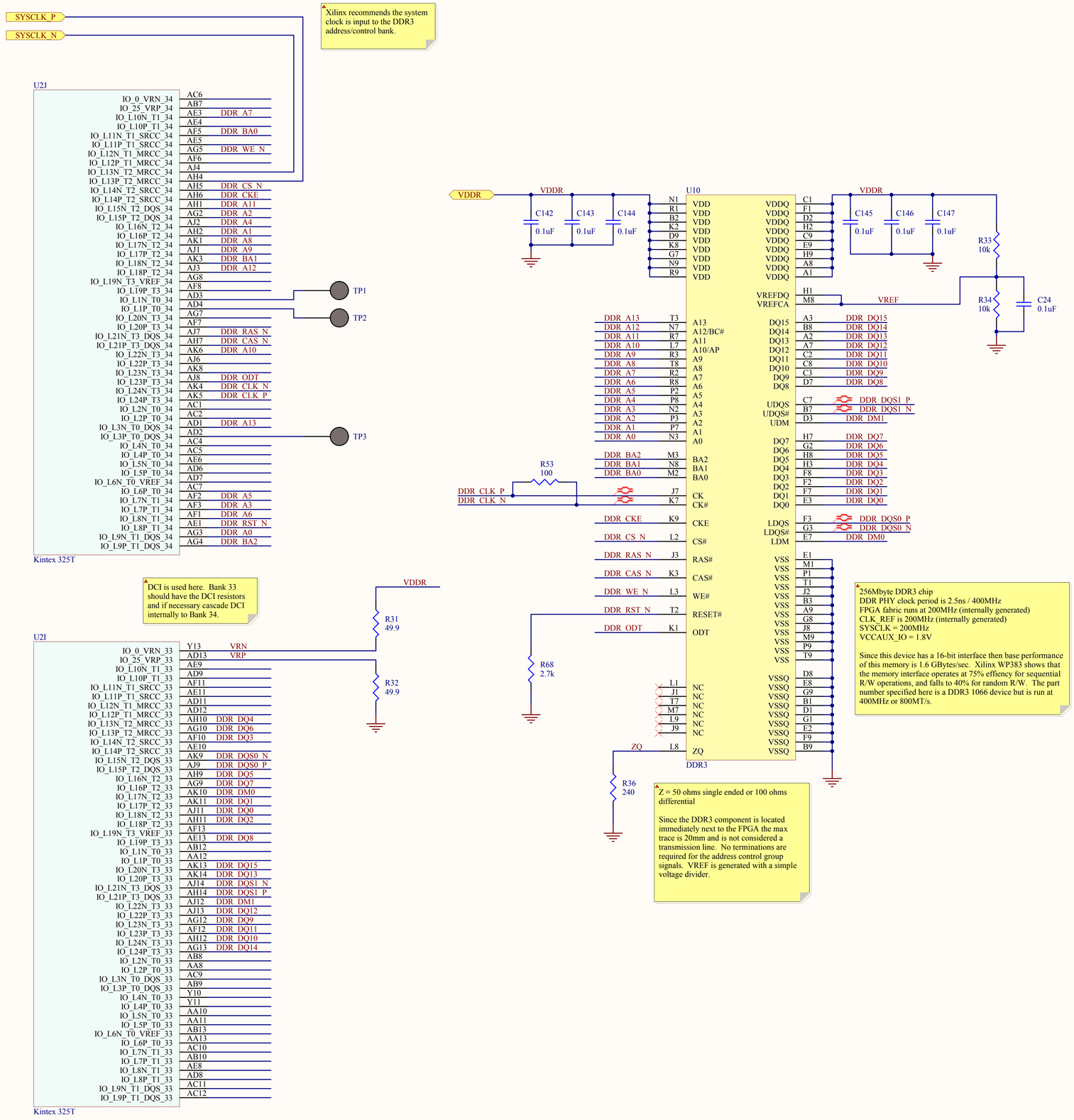

Fermilab
Fermi National Accelerator Laboratory
United States Department of Energy
PPD Electrical Engineering Department

Size	Rev			
C	*	FPGA DDR3		ENGINEER: Jamieson Olsen
				DRAWN: Jamieson Olsen
Number 173843		Date: 11/28/2012 Time: 4:02:41 PM	Sheet 14 of 17	CHECKED: Yasuyuki Okumura
				APPROVED: Ted Liu

C:\Users\Public\Documents\Altium\AD 10\Pulsar\F_DDR.SchDoc

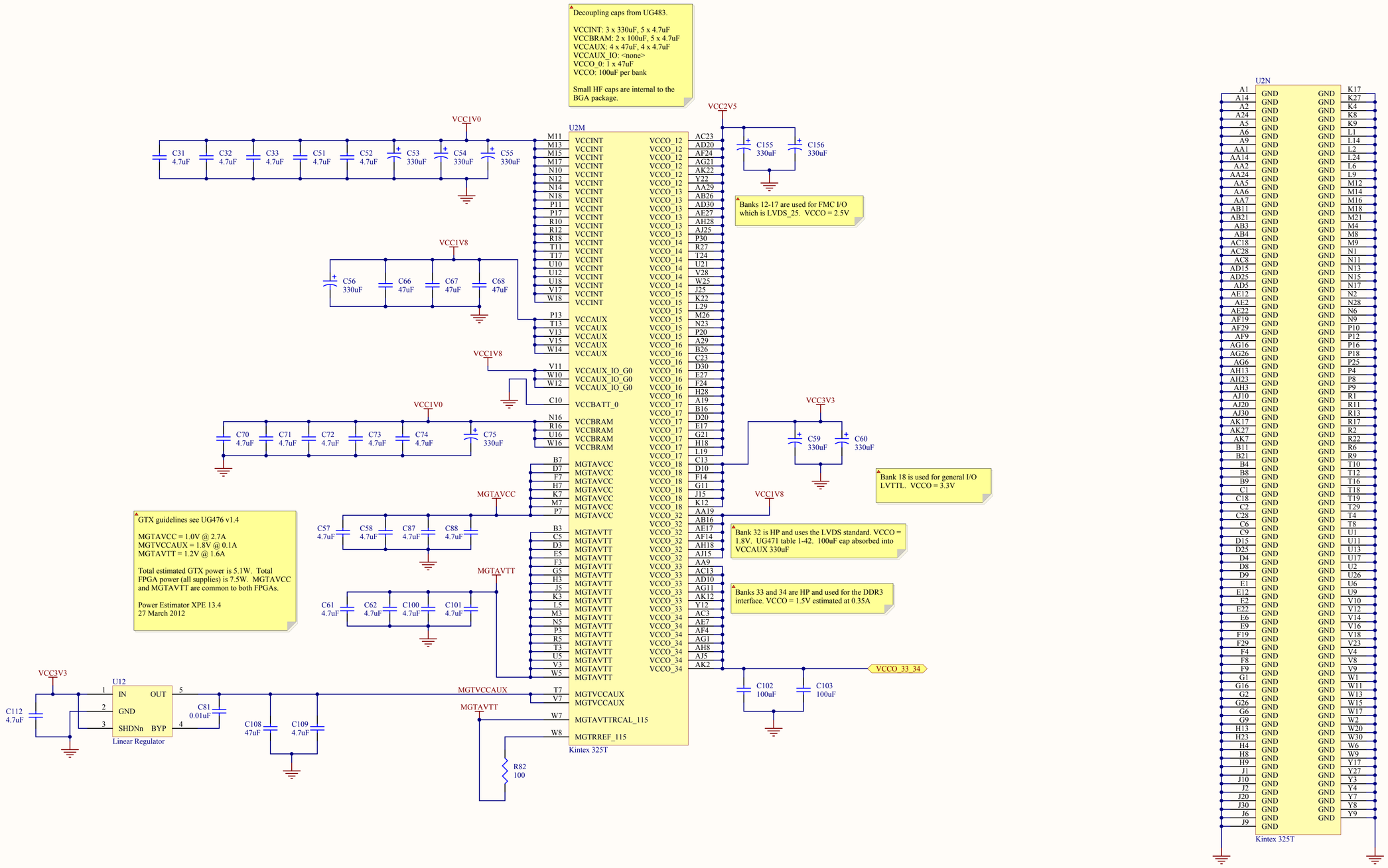

Fermilab
Fermi National Accelerator Laboratory
United States Department of Energy
PPD Electrical Engineering Department

Size	Rev	FPGA POWER		ENGINEER: Jamieson Olsen
C	*			DRAWN: Jamieson Olsen
Number 173843	Date: 11/28/2012 Time: 4:02:42 PM		Sheet 15 of 17	CHECKED: Yasuyuki Okumura APPROVED: Ted Liu

C:\Users\Public\Documents\Altium\AD 10\Pulsar\F_PWR.SchDoc

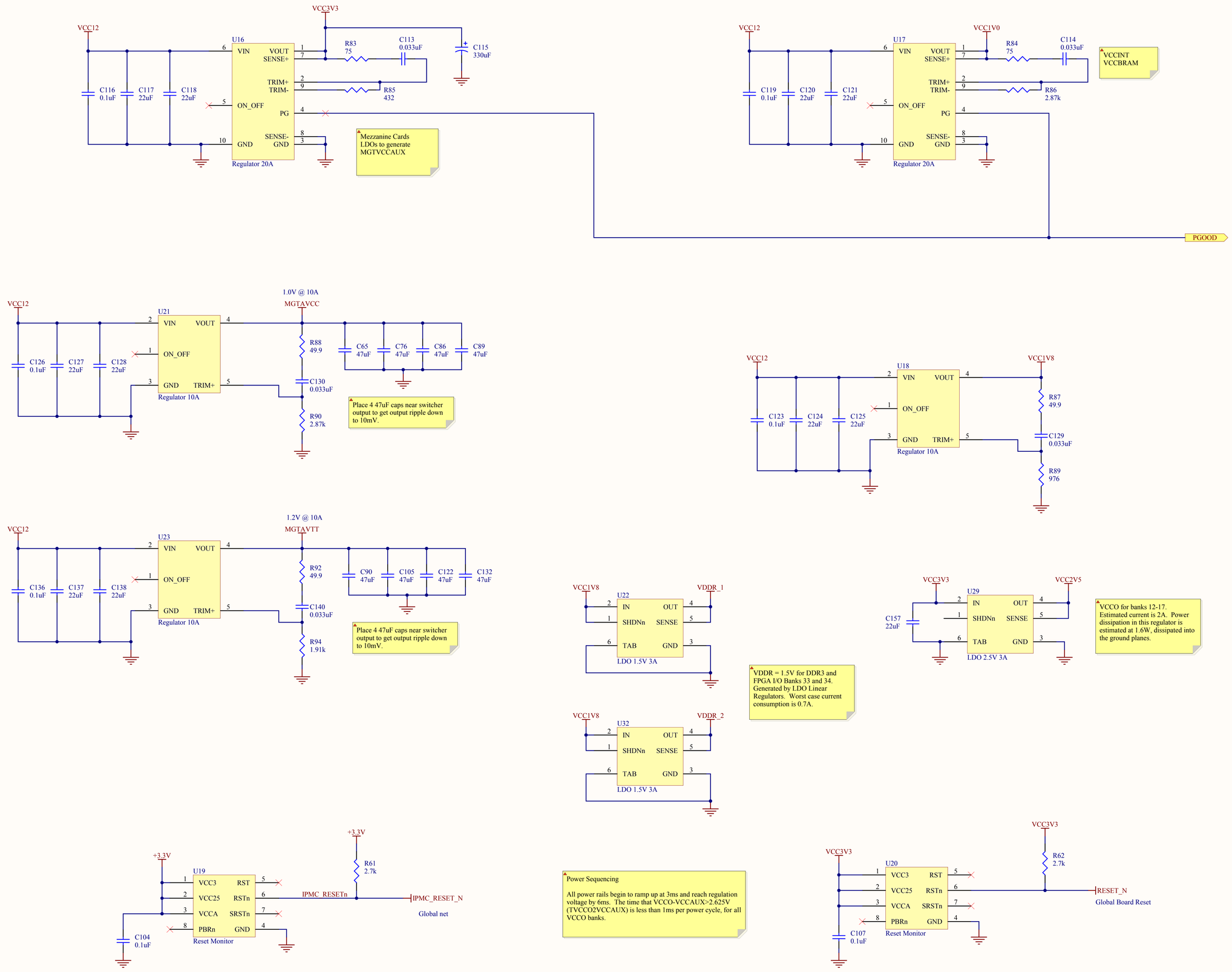

Fermilab
Fermi National Accelerator Laboratory
United States Department of Energy
PPD Electrical Engineering Department

Size C	Rev *	POWER	ENGINEER: Jamieson Olsen DRAWN: Jamieson Olsen CHECKED: Yasuyuki Okumura APPROVED: Ted Liu
Number 173843	Date: 11/28/2012 Time: 4:02:42 PM	Sheet 16 of 17	

C:\Users\Public\Documents\Altium\AD 10\Pulsar\Power.SchDoc

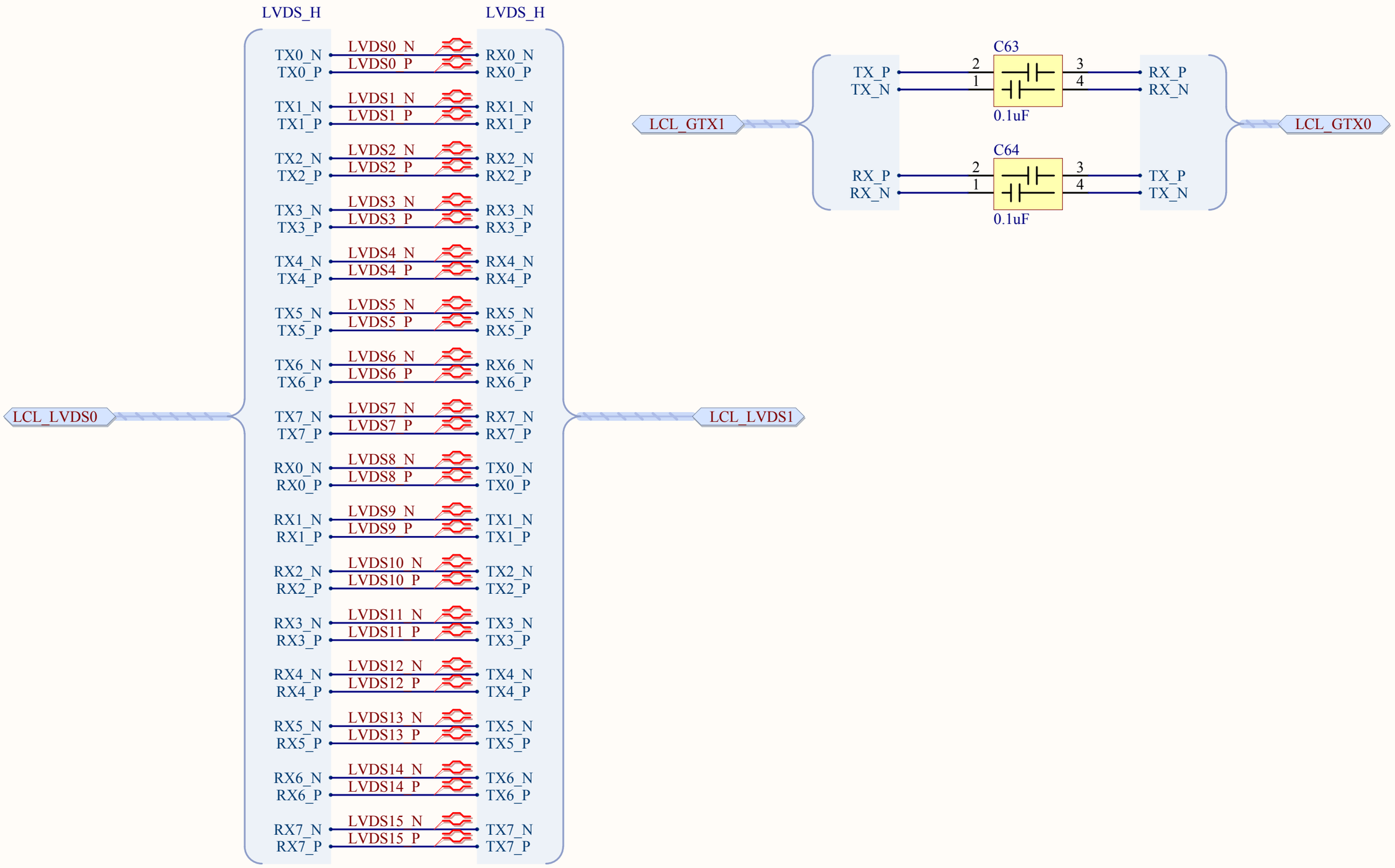

Fermilab

Fermi National Accelerator Laboratory
United States Department of Energy
PPD Electrical Engineering Department

Size	Rev	Local Bus		ENGINEER: Jamieson Olsen
A	*			DRAWN: Jamieson Olsen
Number 173843	Date: 11/28/2012 Time: 4:02:42 PM		Sheet 17 of 17	CHECKED: Yasuyuki Okumura APPROVED: Ted Liu

C:\Users\Public\Documents\Altium\AD 10\Pulsar\local.SchDoc

Project: **pulsar.PrjPCB**

Generated : 11/28/2012 4:02:52 PM

Item #	Comment	Description	Part Number	Quantity	Designator	Footprint
1	0.1uF	Capacitor 0.1uF 0402 X7R 16V	C1005X7R1C104K	66	C1, C2, C3, C4, C7, C8, C9, C11, C12, C13, C14, C15, C17, C18, C23_1, C23_2, C24_1, C24_2, C26, C27, C29, C30, C34, C37, C38, C39, C41, C42, C43, C44, C45, C46, C47, C48, C49, C79, C80, C83, C84, C104, C107, C116, C119, C123, C126, C136, C142_1, C142_2, C143_1, C143_2, C144_1, C144_2, C145_1, C145_2, C146_1, C146_2, C147_1, C147_2, C152, C153, C154, C158, C159, C160, C161, C165	C0402_MED
2	1000pF	Capacitor 1000pF 1206 X7R 2000V	C1206C102KGRACTU	1	C5	C1206_MED
3	18pF	Capacitor 18pF 0402 NP0 50V	C1005C0G1H180J	2	C6, C151	C0402_MED
4	10uF	Capacitor 10uF 0603 X7R 16V	C1608X7R1C104K	9	C10, C25, C28, C69, C77, C78, C82, C85, C91	C0603_MED
5	22uF	Capacitor 22uF 1210 Y5V 25V	C3225Y5V1E226Z	14	C16, C19, C20, C117, C118, C120, C121, C124, C125, C127, C128, C137, C138, C157	C1210_MED
6	100uF	Capacitor 1206 100uF 6.3V X5R	C3216X5R0J107M	5	C21, C102_1, C102_2, C103_1, C103_2	C1206_MED
7	47uF	Capacitor 47uF 0805 X5R 4V	C2012X5R0G476M	18	C22_1, C22_2, C65, C66_1, C66_2, C67_1, C67_2, C68_1, C68_2, C76, C86, C89, C90, C105, C108_1, C108_2, C122, C132	C0805_MED
8	4.7uF	Capacitor 4.7uF 0402 X5R 6.3V	C1005X5R0J475M	40	C31_1, C31_2, C32_1, C32_2, C33_1, C33_2, C51_1, C51_2, C52_1, C52_2, C57_1, C57_2, C58_1, C58_2, C61_1, C61_2, C62_1, C62_2, C70_1, C70_2, C71_1, C71_2, C72_1, C72_2, C73_1, C73_2, C74_1, C74_2, C87_1, C87_2, C88_1, C88_2, C100_1, C100_2, C101_1, C101_2, C109_1, C109_2, C112_1, C112_2	C0402_HIGH
9	120uF	Capacitor 120uF Radial 10x25 Aluminum 100V	EKZE101ELL121MJ25S	2	C35, C36	CAP_RAD_AL_10X25
10	470uF	Capacitor 470uF Radial 16x25 Aluminum 100V	ECA-2AHG471	1	C40	CAP_RAD_AL_16X25
11	470pF	Capacitor 470pF 0402 X7R 50V	C1005X7R1H471M	1	C50	C0402_MED
12	330uF	Capacitor 330uF 7343 6.3V Tantalum	T495D337K006ZTE100	19	C53_1, C53_2, C54_1, C54_2, C55_1, C55_2, C56_1, C56_2, C59_1, C59_2, C60_1, C60_2, C75_1, C75_2, C115, C155_1, C155_2, C156_1, C156_2	C7473_LOW
13	0.1uF	Capacitor Array 2 0.1uF 0504 X5R 6.3V	CKCM25X5R0J104M	20	C63, C64, C94, C95, C96, C97, C98, C99, C106, C110, C111, C131, C133, C134, C135, C139, C141, C148, C149, C150	CKCM25
14	0.01uF	Capacitor 0.01uF 0402 X7R 25V	C1005X7R1E103K	2	C81_1, C81_2	C0402_MED
15	0.1uF	Capacitor Array 4 0.1uF 1206 X7R 16V	CKCA43X7R1C104M	3	C92_1, C92_2, C93	CKCA43
16	0.033uF	Capacitor 0.033uF 0402 X7R 16V	C1005X7R1C333K	5	C113, C114, C129, C130, C140	C0402_MED
17	White	LED White Side View	SM1204UWC	8	D1_1, D1_2, D2_1, D2_2, D3_1, D3_2, D4_1, D4_2	SM1204UWC
18	Blue	LED Blue Side View	SM1204SBWC	1	D5	SM1204SB
19	Green	LED Green Side View	SM1204SGC	3	D6, D8, D9	SM1204SG
20	Red	LED Red Side View	SM1204SRC	1	D7	SM1204SR
21	Blue	LED Blue SMD 0805	LTST-C171TBKT	2	D10_1, D10_2	LED0805
22	Transorb	USB Protection Diode SMT 4 pin	SP0503BAHT	1	D11	SOT192P237X120-4N
23	0.5A	Fuse 0.5A SMT OMNI-BLOK	0154.500	2	F1, F2	SMT_FUSE
24	10A	Fuse 10A SMT OMNI-BLOK	0154010	2	F3, F4	SMT_FUSE
25	8A	Fuse 8A SMT OMNI-BLOK	0154008	2	F5, F6	SMT_FUSE
26	FMC	FMC Connector High Pin Count	ASP-134485-01	4	FMC1_1, FMC1_2, FMC2_1, FMC2_2	CC-HPC-10_MCO
27	Front Panel	Front Panel, Blank, Steel, Side-2 Cover CBT Technology	XAT95-0016	1	FP1	
28	Handles	ATCA handles 1 pair Southco Lever Style CBT Technology	130529	1	HD1	
29	USB Connector	Micro USB Connector Type B Molex	1050170001	1	J1	USB_MICRO_B
30	ADF	ATCA ADF Connector 10 x 4 Pair Press Fit	973032	6	J20, J21, J22, J23, J32, J33	ERNI_973032
31	ZP-016F-S4-2B	ATCA Zone-3A Power Connector Female PICMG 3.8 Positronic	SP7KH4F0BS0A1/AA-PA778	1	J30	ZP-016F-S4-2B
32	ATCA Alignment Block	ATCA Alignment Key Block	1-1469373-1	2	K1, K2	ATCA_K1
33	600	Inductor 600 ohms 100MHz 0402 300mA Ferrite	MMZ1005S601C	2	L1, L2	0402-A
34	Micro SD	Micro SD card holder push-push SMD	5027740891	1	P1	MOLEX_502774
35	ARM Header	Header TH 10x2 4 Wall Keyed	87834-2019	1	P2	MOLEX_87834-2019
36	Xilinx Header	Header TH 7x2 2mm Keyed	87831-1420	1	P3	MOLEX_87831
37	Zone-1	ATCA Zone-1 power input connector	1766500-1	1	P10	ATCA_P10
38	NPN	General Purpose NPN transistor SOT23	MMBT3904	1	Q1	SOT95P245X110-3N
39	NDS331N	N-CH logic level MOSFET SuperSOT-3	NDS331N	1	Q2	SOT95P245X110-3N
40	49.9	Resistor 49.9 ohms 0402	ERJ-2RKF49R9X	11	R1, R2, R3, R7, R31_1, R31_2, R32_1, R32_2, R87, R88, R92	R0402_MED
41	75	Resistor 75 ohms 0402	ERJ-2GEJ750X	5	R4, R5, R56, R83, R84	R0402_MED
42	10k	Resistor 10k ohms 0402	ERJ-2GEJ103X	13	R6, R11, R33_1, R33_2, R34_1, R34_2, R37, R38, R42, R43, R45, R46, R47	R0402_MED
43	4.87k	Resistor 4.87k ohms 0402	ERJ-2RKF4871X	2	R8, R58	R0402_MED
44	2.7k	Resistor 2.7k ohms 0402	ERJ-2GEJ272X	21	R9, R13, R14, R15, R18, R23, R24, R25, R26, R29_1, R29_2, R30_1, R30_2, R48, R49, R50, R57, R61, R62, R68_1, R68_2	R0402_MED
45	20	Resistor 20 ohms 0402	ERJ-2GEJ200X	9	R10_1, R10_2, R12_1, R12_2, R16_1, R16_2, R22, R44_1, R44_2	R0402_MED
46	100	Resistor 100 ohms 0402	ERJ-2GEJ101X	8	R17, R19, R20, R21, R53_1, R53_2, R82_1, R82_2	C0402_HIGH
47	240	Resistor 240 ohms 0402	ERJ-2RKF2400X	3	R27, R36_1, R36_2	R0402_MED
48	332	Resistor 332 ohms 0402	ERJ-2RKF3320X	2	R28_1, R28_2	R0402_MED
49	36.5k	Resistor 36.5k ohms 0402	ERJ-2RKF3652X	2	R35, R51	R0402_MED
50	15	Resistor 15 ohms 2512 1W	ERJ-1TYJ150U	2	R39, R40	RESC6432X06M
51	3k	Resistor 3k ohms 2512 1W	ERJ-1TYJ302U	1	R41	RESC6432X06M
52	1.91k	Resistor 1.91k ohms 0402	ERJ-2RKF1911X	2	R52, R94	R0402_MED
53	10M	Resistor 10M ohms 1206	ERJ-8GEYJ106V	2	R54, R55	C1206_MED
54	432	Resistor 432 ohms 0402	ERJ-2RKF4320X	1	R85	R0402_MED
55	2.87k	Resistor 2.87k ohms 0402	ERJ-2RKF2871X	2	R86, R90	R0402_MED
56	976	Resistor 976 ohms 0402	ERJ-2RKF9760X	1	R89	R0402_MED
57	Microswitch	Microswitch SPDT TH Lever	MDS6500AL02LS	1	S2	MDS002
58	DIP Switch 6	Switch DIP 6 pos SMD Half Pitch C&K	TDA06H0SB1	2	SW1, SW2	DIPSW_6_HP
59	Ethernet Transformer	Ethernet Transformer 1:1 10/100 1 Port	H1102NL	1	T1	PULSE_H11XXNL
60	Microcontroller	ARM Microcontroller Cortex-M3 TQFP100	LPC1768FBD100	1	U1	TSQFP50P1600X1600X160-100N
61	Kintex 325T	Xilinx Kintex 325T FPGA	XC7K325T-2FFG900C	2	U2_1, U2_2	BGA900C100P30X30_3100X3100X315
62	Ethernet PHY	Ethernet PHY 10/100 Interface TQFP48	DP83848CVV	1	U3	VBH48A_N
63	High Side Power Switch	High side power switch SOIC8	LTC1477CS8	2	U4, U30	SOIC127P600X175-8N
64	I2C Bus Isolator	I2C Bus Isolator TSOP8	LTC4300-1CMS8	3	U5, U6, U35	TSOP65P500X100-8N
65	Optocoupler	Optocoupler SOP4 phototransistor output	FODM2701R2	1	U7	SOP254P700X200-4N
66	PIM	ATCA Power Input Module 300W	PIM300FZ	1	U8	PIM300
67	Bus Converter	Bus Converter 12V 20A SMBus Interface	EBDW020A0B41Z	1	U9	EBDW020A0B
68	DDR3	DDR3-1333 2Gbit 128Mx16 BGA96	MT41J128M16HA-15E	2	U10_1, U10_2	BGA96C80P16X9_1400X900X110
69	Clock Generator	Clock Synthesis Low Jitter	CDCM61004	2	U11, U27	QFN50P500X500X100-32N
70	Linear Regulator	Linear Regulator 1.8V 100mA SOT95	LT1761ES5-1.8	2	U12_1, U12_2	SOT95P245X100-5N
71	74LCX138	Demux 3:8	MC74LCX138D	1	U13	SOIC127P600X175-16N
72	USB UART	USB RS232 Interface	CP2102-GM	1	U14	QFN50P500X500X100-28N
73	Temperature Sensor	I2C Temperature Sensor TSSOP10	LTC2990CMS	1	U15	TSSOP50P490X110-10N
74	Regulator 20A	Switching Regulator Naos Raptor 20A	NSR020A0X43Z	2	U16, U17	NSR020A0
75	Regulator 10A	Switching Regulator Naos Raptor 10A	NSR010A0X4Z	3	U18, U21, U23	NSR010A0
76	Reset Monitor	Reset monitor triple supply SOIC8	LTC1326CS8-2.5	2	U19, U20	SOIC127P600X175-8N
77	LDO 1.5V 3A	Linear Regulator 1.5V 3A DDPAK-5	LT1764AEQ-15	2	U22, U32	TO170P1450X450-6N
78	MLVDS	Single Channel M-LVDS Transceiver SOIC8	DS91D176TMA	4	U24, U25, U26, U28	SOIC127P600X265-8N
79	LDO 2.5V 3A	Linear Regulator 2.5V 3A DDPAK-5	LT1764AEQ-2.5	1	U29	TO170P1450X450-6N
80	74LCX157	Quad 2 in MUX	MC74LCX157M	1	U31	SOIC127P600X175-16N
81	PROFET HSPS	High Side Power Switch PROFET 8A 20A PEAK TO252-5	BTS5012SDA	1	U33	TO252-5-11
82	Config Gate	Configurable Multi-Function Gate SOT23-6	SN74LVC1G98DBVR	1	U34	SOT95P280X145-6N
83	25MHz	Crystal 25MHz 10ppm 8 pF 30 ohm DFN 5mm x 3.2mm	ECS-250-8-30B-CKM	2	X1, X2	ECX-53B
84	50MHz	Oscillator 50MHz 50ppm 2.5x2mm SMD 3.3V	ECS-2033-500-BN	1	X3	ECS_2033
85	25MHz	Crystal 25MHz 10ppm 8pF 60ohm 2.5mm x 2mm	ECS-250-8-36CKM	1	X4	ECS_2033