# PULSAR IIa REAR TRANSITION MODULE

AdvancedTCA
PICMG 3.8

Fermilab
Fermi National Accelerator Laboratory
United States Department of Energy
PPD Electrical Engineering Department

| Size | Rev | Rear Transition Module | ENGINEER: Jamieson Olsen |
|---|---|---|---|
| B | * | | DRAWN: Jamieson Olsen |
| Number 173844 | Date: 11/28/2012 Time: 4:23:08 PM | Sheet 1 of 6 | CHECKED: Yasuyuki Okumura APPROVED: Ted Liu |

C:\Users\Public\Documents\Altium\AD 10\RTM\Top.SchDoc

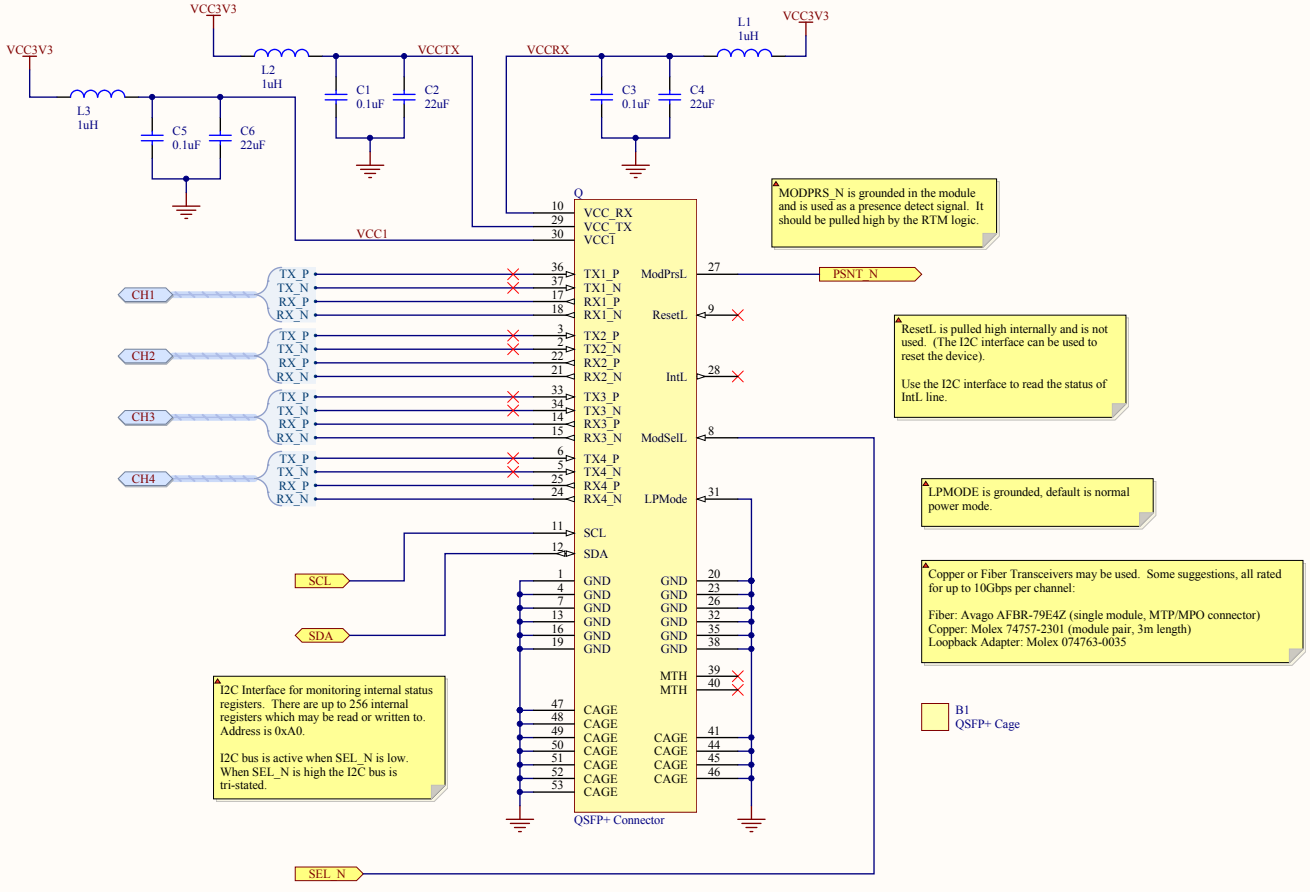


MODPRS_N is grounded in the module and is used as a presence detect signal. It should be pulled high by the RTM logic.

ResetL is pulled high internally and is not used. (The I2C interface can be used to reset the device).

Use the I2C interface to read the status of IntL line.

LPMODE is grounded, default is normal power mode.

Copper or Fiber Transceivers may be used. Some suggestions, all rated for up to 10Gbps per channel:

Fiber: Avago AFBR-79E4Z (single module, MTP/MPO connector)
Copper: Molex 74757-2301 (module pair, 3m length)
Loopback Adapter: Molex 074763-0035

I2C Interface for monitoring internal status registers. There are up to 256 internal registers which may be read or written to. Address is 0xA0.

I2C bus is active when SEL_N is low. When SEL_N is high the I2C bus is tri-stated.

B1
QSFP+ Cage

| | | | |
|---|---|---|---|
| Fermilab | Fermi National Accelerator Laboratory<br>United States Department of Energy<br>PPD Electrical Engineering Department | | |
| Size B | Rev * | QSFP | ENGINEER: Jamieson Olsen<br>DRAWN: Jamieson Olsen<br>CHECKED: Yasuyuki Okumura<br>APPROVED: Ted Liu |
| Number 173844 | Date: 11/28/2012<br>Time: 4:23:08 PM | Sheet 2 of 6 | |

C:\Users\Public\Documents\Altium\AD 10\RTM\QSFP.SchDoc

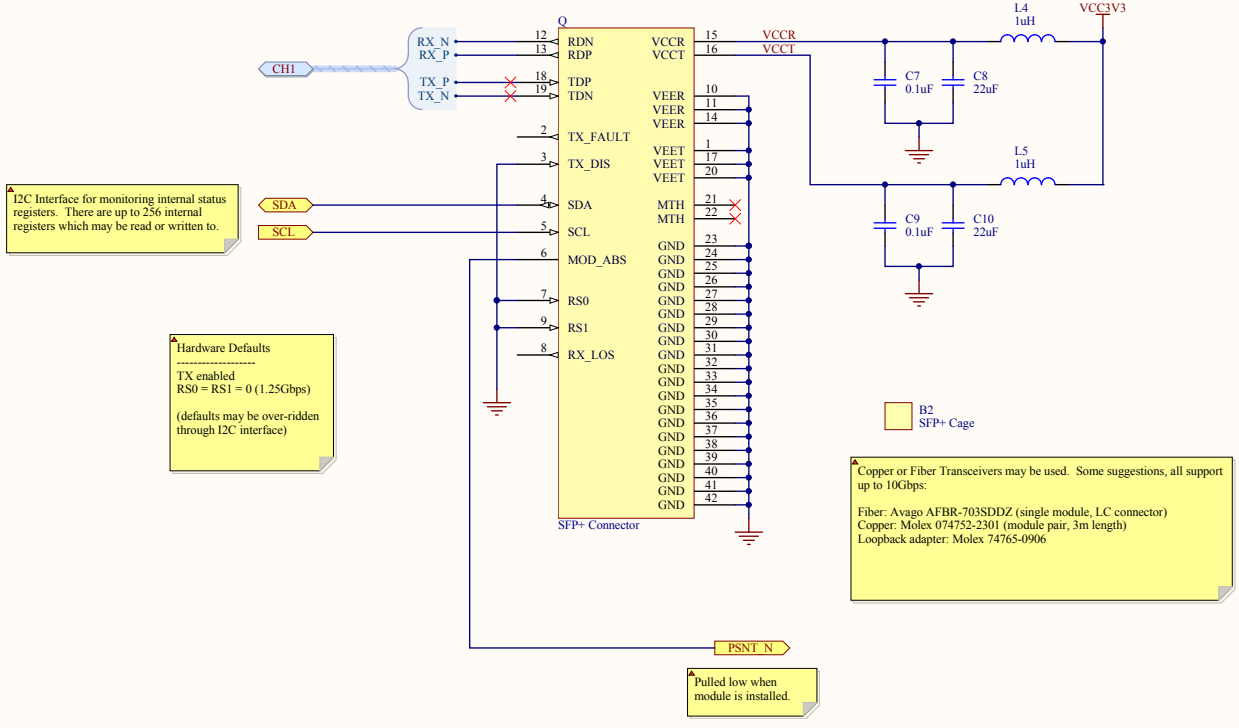


I2C Interface for monitoring internal status registers. There are up to 256 internal registers which may be read or written to.

Hardware Defaults
---
TX enabled
RS0 = RS1 = 0 (1.25Gbps)

(defaults may be over-ridden through I2C interface)

Copper or Fiber Transceivers may be used. Some suggestions, all support up to 10Gbps:

Fiber: Avago AFBR-703SDDZ (single module, LC connector)
Copper: Molex 074752-2301 (module pair, 3m length)
Loopback adapter: Molex 74765-0906

Pulled low when module is installed.

| | | | |
|---|---|---|---|
| Fermilab | Fermi National Accelerator Laboratory<br>United States Department of Energy<br>PPD Electrical Engineering Department | | |
| Size B | Rev * | SFP | ENGINEER: Jamieson Olsen<br>DRAWN: Jamieson Olsen<br>CHECKED: Yasuyuki Okumura<br>APPROVED: Ted Liu |
| Number 173844 | Date: 11/28/2012<br>Time: 4:23:08 PM | Sheet 3 of 6 | |
| C:\Users\Public\Documents\Altium\AD 10\RTM\SFP.SchDoc | | | |

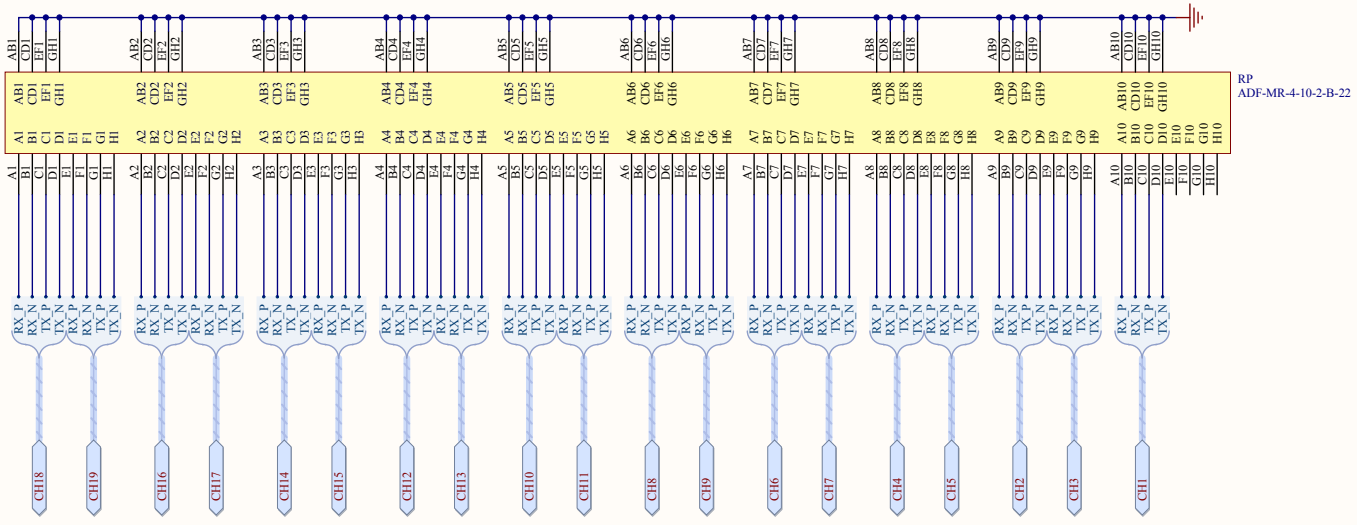


Fermilab

**Fermi National Accelerator Laboratory**
United States Department of Energy
PPD Electrical Engineering Department

| | | | |
|---|---|---|---|
| Size B | Rev * | **ADF Connector** | ENGINEER: Jamieson Olsen<br>DRAWN: Jamieson Olsen<br>CHECKED: Yasuyuki Okumura<br>APPROVED: Ted Liu |
| Number 173844 | Date: 11/28/2012<br>Time: 4:23:08 PM | Sheet 4 of 6 | |

C:\Users\Public\Documents\Altium\AD 10\RTM\Connector.SchDoc

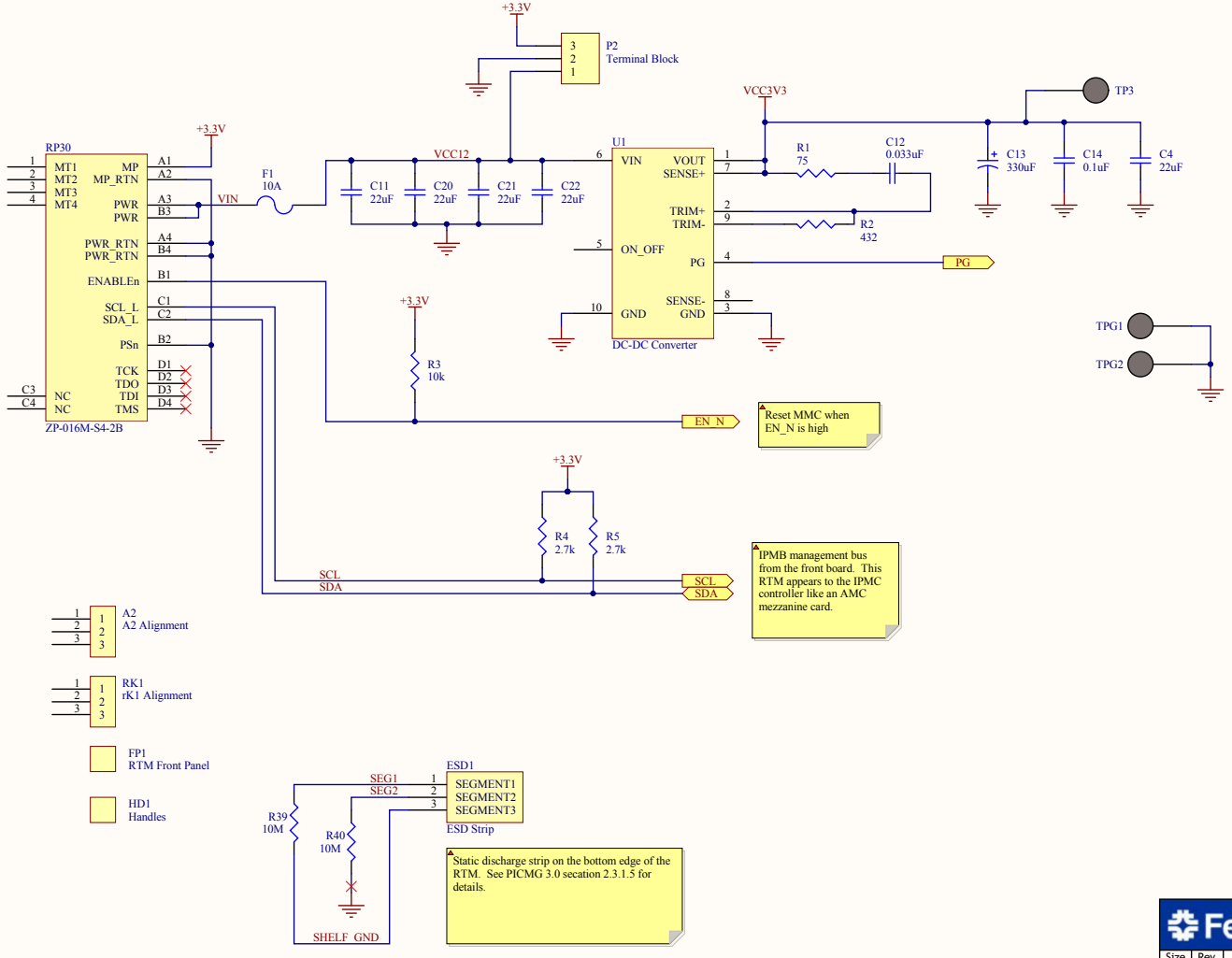


Fermilab
Fermi National Accelerator Laboratory
United States Department of Energy
PPD Electrical Engineering Department

| | | | |
|---|---|---|---|
| Size B | Rev * | Power | ENGINEER: Jamieson Olsen<br>DRAWN: Jamieson Olsen<br>CHECKED: Yasuyuki Okumura<br>APPROVED: Ted Liu |
| Number 173844 | Date: 11/28/2012<br>Time: 4:23:08 PM | Sheet 5 of 6 | |

C:\Users\Public\Documents\Altium\AD 10\RTM\Power.SchDoc

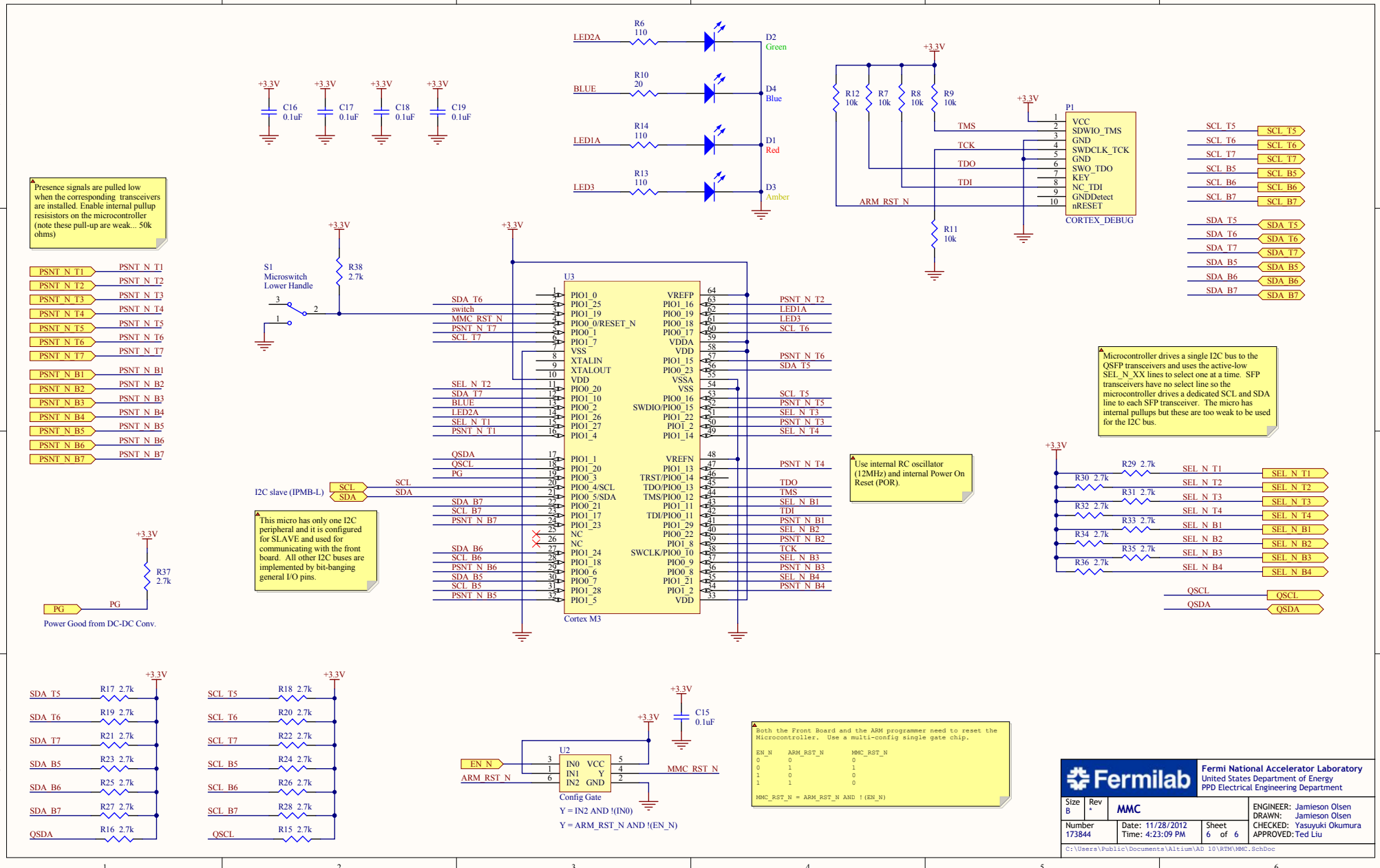
Presence signals are pulled low when the corresponding transceivers are installed. Enable internal pullup resisistors on the microcontroller (note these pull-up are weak... 50k ohms)
PSNT_N_T1
PSNT_N_T2
PSNT_N_T3
PSNT_N_T4
PSNT_N_T5
PSNT_N_T6
PSNT_N_T7
PSNT_N_B1
PSNT_N_B2
PSNT_N_B3
PSNT_N_B4
PSNT_N_B5
PSNT_N_B6
PSNT_N_B7
+3.3V
R37
2.7k
PG
Power Good from DC-DC Conv.
C16
0.1uF
C17
0.1uF
C18
0.1uF
C19
0.1uF
S1
Microswitch
Lower Handle
R38
2.7k
U3
Cortex M3
SDA_T6
switch
MMC_RST_N
SCL_T7
SEL_N_T2
SDA_T7
BLUE
LED2A
SEL_N_T1
QSDA
QSCL
PG
I2C slave (IPMB-L)
SCL
SDA
SDA_B7
SCL_B7
SDA_B6
SCL_B6
SCL_B5
This micro has only one I2C peripheral and it is configured for SLAVE and used for communicating with the front board. All other I2C buses are implemented by bit-banging general I/O pins.
LED2A
BLUE
LED1A
LED3
R6
110
R10
20
R14
110
R13
110
D2
Green
D4
Blue
D1
Red
D3
Amber
R12
10k
R7
10k
R8
10k
R9
10k
R11
10k
TMS
TCK
TDO
TDI
ARM_RST_N
P1
VCC
SDWIO_TMS
GND
SWDCLK_TCK
GND
SWO_TDO
KEY
NC_TDI
GNDDetect
nRESET
CORTEX_DEBUG
Microcontroller drives a single I2C bus to the QSFP transceivers and uses the active-low SEL_N_XX lines to select one at a time. SFP transceivers have no select line so the microcontroller drives a dedicated SCL and SDA line to each SFP transceiver. The micro has internal pullups but these are too weak to be used for the I2C bus.
Use internal RC oscillator (12MHz) and internal Power On Reset (POR).
R29 2.7k
R30 2.7k
R31 2.7k
R32 2.7k
R33 2.7k
R34 2.7k
R35 2.7k
R36 2.7k
SEL_N_T1
SEL_N_T2
SEL_N_T3
SEL_N_T4
SEL_N_B1
SEL_N_B2
SEL_N_B3
SEL_N_B4
QSCL
QSDA
R17 2.7k
R19 2.7k
R21 2.7k
R23 2.7k
R25 2.7k
R27 2.7k
R16 2.7k
R18 2.7k
R20 2.7k
R22 2.7k
R24 2.7k
R26 2.7k
R28 2.7k
R15 2.7k
C15
0.1uF
U2
EN_N
ARM_RST_N
MMC_RST_N
IN0 VCC
IN1 Y
IN2 GND
Config Gate
Y = IN2 AND !(IN0)
Y = ARM_RST_N AND !(EN_N)
Both the Front Board and the ARM programmer need to reset the Microcontroller. Use a multi-config single gate chip.
EN_N ARM_RST_N MMC_RST_N
0 0 0
0 1 1
1 0 0
1 1 0
MMC_RST_N = ARM_RST_N AND !(EN_N)
Fermilab
Fermi National Accelerator Laboratory
United States Department of Energy
PPD Electrical Engineering Department
Size B
Rev *
MMC
ENGINEER: Jamieson Olsen
DRAWN: Jamieson Olsen
CHECKED: Yasuyuki Okumura
APPROVED: Ted Liu
Number 173844
Date: 11/28/2012
Time: 4:23:09 PM
Sheet 6 of 6
C:\Users\Public\Documents\Altium\AD 10\RTM\MMC.SchDoc

**Project:** **rtm.PrjPCB**

Generated : 11/28/2012 4:23:11 PM

| Item # | Comment | Description | Part Number | Quantity | Designator | Footprint |
|---|---|---|---|---|---|---|
| 1 | A2 Alignment | ATCA A2 Alignment Pin Block | 1-1469372-1 | 1 | A2 | ATCA_A2 |
| 2 | QSFP+ Cage | QSFP+ Cage | 74750-0023 | 8 | B1_B1, B1_B2, B1_B3, B1_B4, B1_T1, B1_T2, B1_T3, B1_T4 | |
| 3 | SFP+ Cage | SFP+ Cage | 74737-0004 | 6 | B2_B5, B2_B6, B2_B7, B2_T5, B2_T6, B2_T7 | |
| 4 | 0.1uF | Capacitor 0.1uF 0402 X7R 16V | C1005X7R1C104K | 42 | C1_B1, C1_B2, C1_B3, C1_B4, C1_T1, C1_T2, C1_T3, C1_T4, C3_B1, C3_B2, C3_B3, C3_B4, C3_T1, C3_T2, C3_T3, C3_T4, C5_B1, C5_B2, C5_B3, C5_B4, C5_T1, C5_T2, C5_T3, C5_T4, C7_B5, C7_B6, C7_B7, C7_T5, C7_T6, C7_T7, C9_B5, C9_B6, C9_B7, C9_T5, C9_T6, C9_T7, C14, C15, C16, C17, C18, C19 | C0402_MED |
| 5 | 22uF | Capacitor 22uF 0603 X5R 6.3V | C1608X5R0J226M | 37 | C2_B1, C2_B2, C2_B3, C2_B4, C2_T1, C2_T2, C2_T3, C2_T4, C4, C4_B1, C4_B2, C4_B3, C4_B4, C4_T1, C4_T2, C4_T3, C4_T4, C6_B1, C6_B2, C6_B3, C6_B4, C6_T1, C6_T2, C6_T3, C6_T4, C8_B5, C8_B6, C8_B7, C8_T5, C8_T6, C8_T7, C10_B5, C10_B6, C10_B7, C10_T5, C10_T6, C10_T7 | C0603_MED |
| 6 | 22uF | Capacitor 22uF 1210 Y5V 25V | C3225Y5V1E226Z | 4 | C11, C20, C21, C22 | C1210_MED |
| 7 | 0.033uF | Capacitor 0.033uF 0402 X7R 16V | C1005X7R1C333K | 1 | C12 | C0402_MED |
| 8 | 330uF | Capacitor 330uF 7343 Tantalum 6.3V | T495D337K006ZTE100 | 1 | C13 | C7473_LOW |
| 9 | Red | LED SMT Red side view | SM1204SRC | 1 | D1 | SM1204SR |
| 10 | Green | LED SMT Green side view | SM1204SGC | 1 | D2 | SM1204SG |
| 11 | Amber | LED SMT Amber side view | SM1204UAC | 1 | D3 | SM1204UAC |
| 12 | Blue | LED SMT Blue side view | SM1204SBWC | 1 | D4 | SM1204SB |
| 13 | 10A | Fuse 10A OMNI-BLOK SMT | 0154010 | 1 | F1 | SMT_FUSE |
| 14 | RTM Front Panel | ATCA RTM Panel blank extruded aluminum with hardware CBT Technology | XAT95-0023 Rev-A | 1 | FP1 | |
| 15 | Handles | ATCA handles 1 pair Southco Lever Style CBT Technology | 130529 | 1 | HD1 | |
| 16 | 1uH | Inductor Ferrite 1uH 0603 700mA | MLZ1608N1R0L | 36 | L1_B1, L1_B2, L1_B3, L1_B4, L1_T1, L1_T2, L1_T3, L1_T4, L2_B1, L2_B2, L2_B3, L2_B4, L2_T1, L2_T2, L2_T3, L2_T4, L3_B1, L3_B2, L3_B3, L3_B4, L3_T1, L3_T2, L3_T3, L3_T4, L4_B5, L4_B6, L4_B7, L4_T5, L4_T6, L4_T7, L5_B5, L5_B6, L5_B7, L5_T5, L5_T6, L5_T7 | C0603_MED |
| 17 | CORTEX_DEBUG | ARM Cortex-M Debug Header | FTSH-105-01-F-D-K | 1 | P1 | CORTEX_M_DBG |
| 18 | Terminal Block | Terminal Block socket straight 3.5mm 3 pos | 20020107-C031A01LF | 1 | P2 | TERM_BLOCK_3_35mm |
| 19 | QSFP+ Connector | QSFP+ Connector | 75586-0104 | 8 | Q_B1, Q_B2, Q_B3, Q_B4, Q_T1, Q_T2, Q_T3, Q_T4 | QSFP_NRL |
| 20 | SFP+ Connector | SFP+ Connector | 74441-0010 | 6 | Q_B5, Q_B6, Q_B7, Q_T5, Q_T6, Q_T7 | SFP_CONNECTOR |
| 21 | 75 | Resistor 75 ohms 0402 | ERJ-2GEJ750X | 1 | R1 | R0402_MED |
| 22 | 432 | Resistor 436 ohms 0402 | ERJ-2RKF4320X | 1 | R2 | R0402_MED |
| 23 | 10k | Resistor 10k ohms 0402 | ERJ-2RKF1002X | 6 | R3, R7, R8, R9, R11, R12 | R0402_MED |
| 24 | 2.7k | Resistor 2.7k ohms 0402 | ERJ-2GEJ272X | 26 | R4, R5, R15, R16, R17, R18, R19, R20, R21, R22, R23, R24, R25, R26, R27, R28, R29, R30, R31, R32, R33, R34, R35, R36, R37, R38 | R0402_MED |
| 25 | 110 | Resistor 110 ohms 0402 | ERJ-2GEJ111X | 3 | R6, R13, R14 | R0402_MED |
| 26 | 20 | Resistor 20 ohms 0402 | ERJ-2GEJ200X | 1 | R10 | R0402_MED |
| 27 | 10M | Resistor 10M ohms 1206 | ERJ-8GEYJ106V | 2 | R39, R40 | C1206_MED |
| 28 | rK1 Alignment | ATCA rK1 Alignment Block | 1469374-1 | 1 | RK1 | ATCA_rK1 |
| 29 | ZP-016M-S4-2B | Zone-3A Connector PICMG 3.8 Positronic | SP7KH4M0BS0A1/AA-PA778 | 1 | RP30 | ZP-016M-S4-2B |
| 30 | ADF-MR-4-10-2-B-22 | ATCA RTM ADF Connector | 6469048-1 | 2 | RP_32, RP_33 | RTM_CONNECTOR |
| 31 | Microswitch | Microswitch SPDT TH Lever | MDS6500AL02LS | 1 | S1 | MDS002 |
| 32 | DC-DC Converter | GE Naos Raptor 20A | NSR020A0X43Z | 1 | U1 | NSR020A0 |
| 33 | Config Gate | Configurable Multi-Function Gate SOT23-6 | SN74LVC1G98DBVR | 1 | U2 | SOT95P280X145-6N |
| 34 | Cortex M3 | NXP Cortex-M3 Microcontroller | LPC1317FBD64 | 1 | U3 | TSQFP50P1200X1200X160-64N |