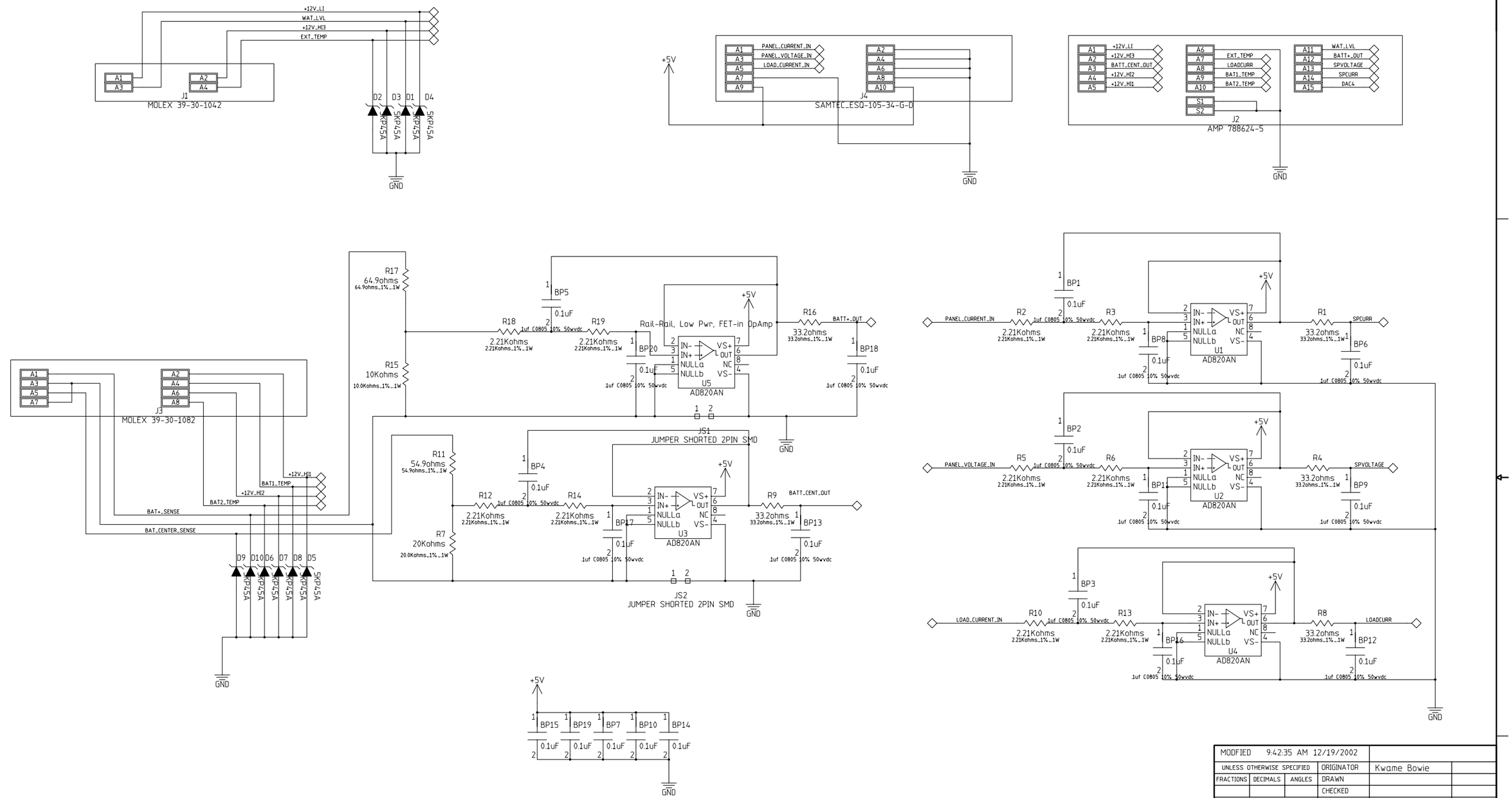

MODIFIED 9:42:35 AM 12/19/2002				
UNLESS OTHERWISE SPECIFIED			ORIGINATOR	Kwame Bowie
FRACTIONS	DECIMALS	ANGLES	DRAWN	
			CHECKED	
1. BREAK ALL SHARP EDGES 1/64 MAX.			APPROVED	
2. DO NOT SCALE DWG.			USED ON	
3. DIMENSIONING IN ACCORD WITH ANSI Y14.5 STD's.			MATERIAL	
MAX. ALL MACHINED SURFACES				

Fermi National Accelerator Laboratory
United States Department of Energy

U:\active_pcbs\microTPCB_Board_B_preproduction\microTPCB_B.prj

SIZE	SCALE	FILMED	DRAWING NUMBER	PAGE 01 of 01	REV
D	1:1		ED-173484		A

H=8ND; V=4LA