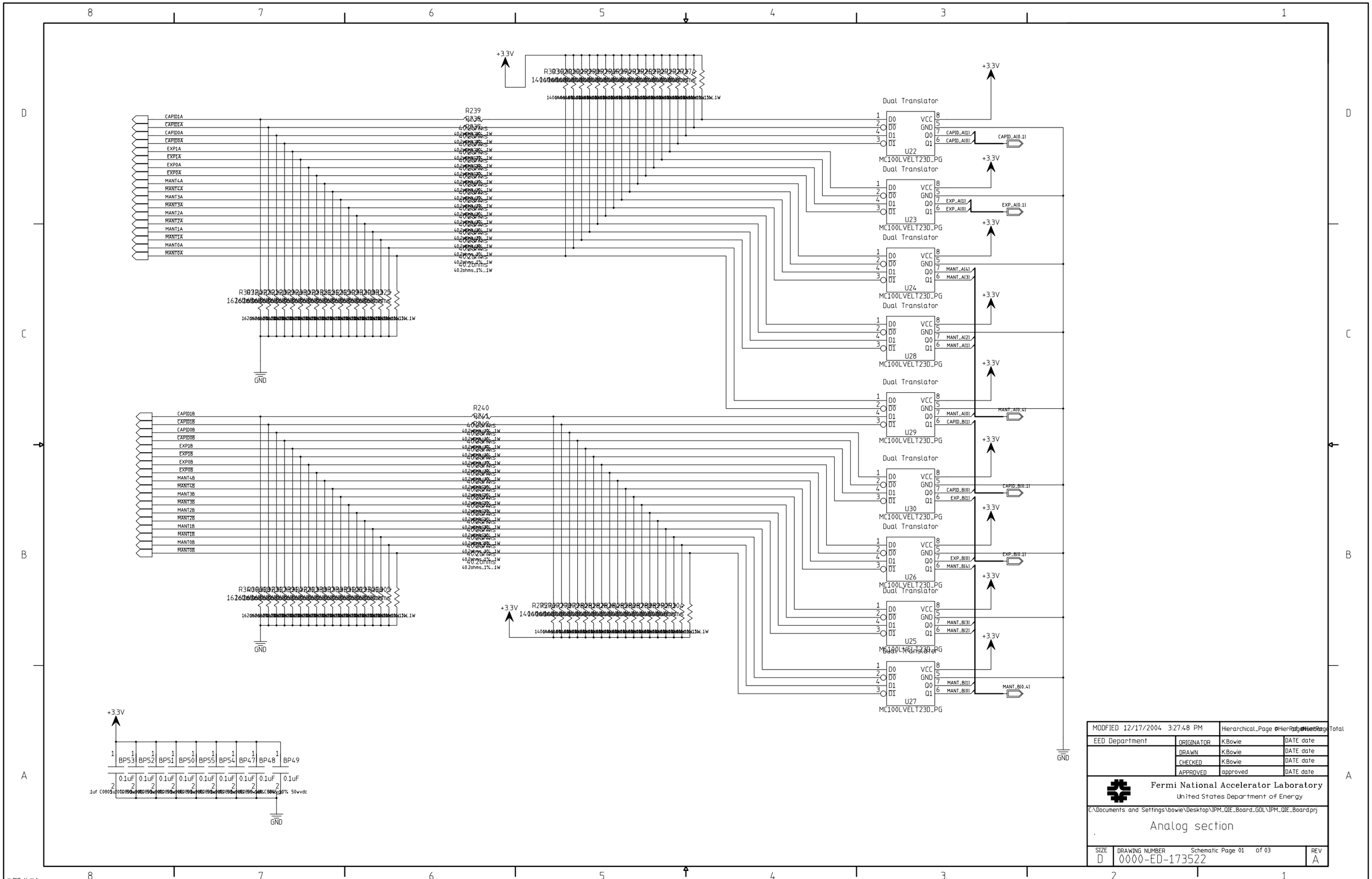

Dual Translator
MC100LVELT23D_PG
U22
U23
U24
U28
U29
U30
U26
U25
U27
R239
R240
+3.3V
GND
BP53 BP52 BP51 BP50 BP55 BP54 BP47 BP48 BP49
0.1uF
MODFIED 12/17/2004 3:27:48 PM
EED Department
ORIGINATOR K.Bowie DATE date
DRAWN K.Bowie DATE date
CHECKED K.Bowie DATE date
APPROVED approved DATE date
Fermi National Accelerator Laboratory
United States Department of Energy
C:\Documents and Settings\bowie\Desktop\IPM_QIE_Board_GOL\IPM_QIE_Board.prj
Analog section
SIZE D
DRAWING NUMBER 0000-ED-173522
Schematic Page 01 of 03
REV A
H=8ND; V=4LA

CIRCUIT A

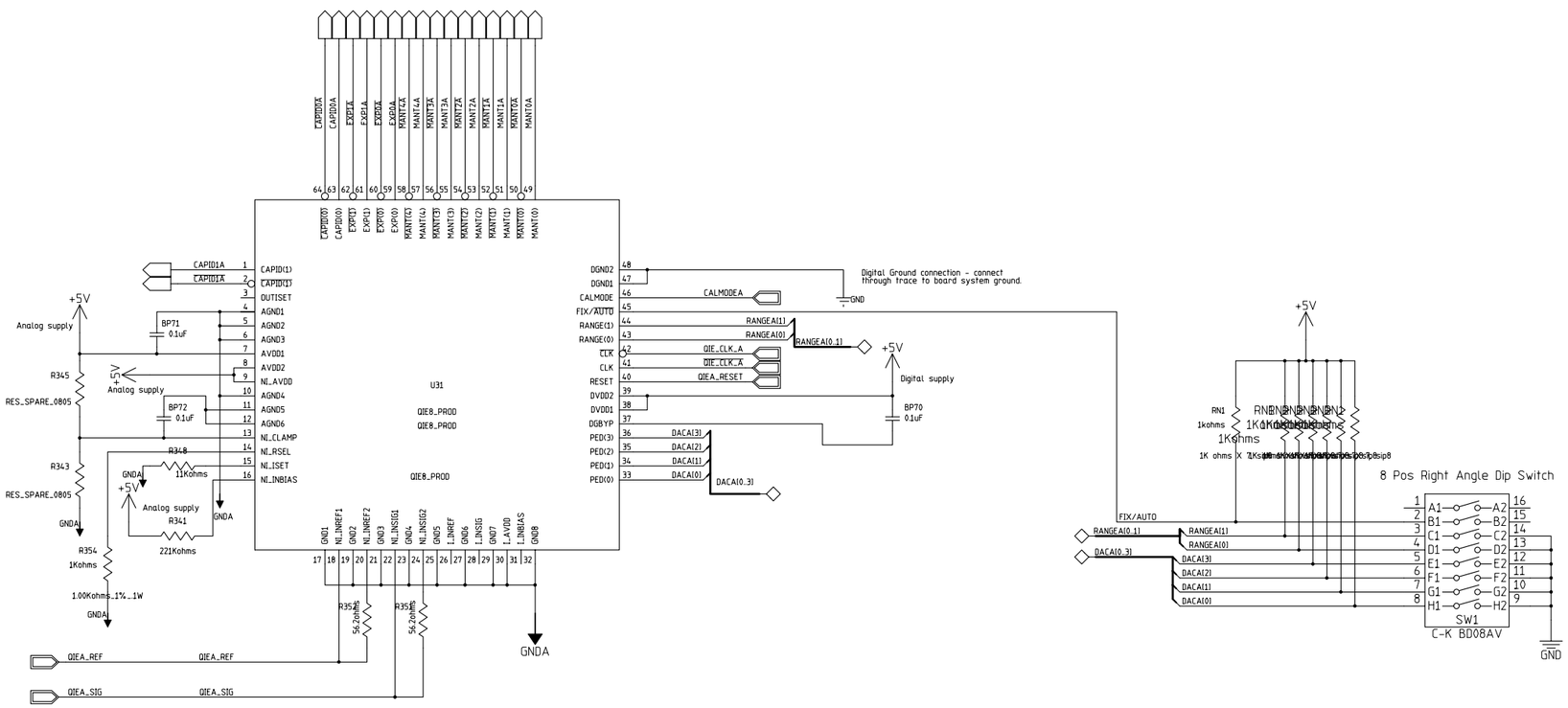

NI_INREF/NI_INSIG
use 56 ohm serial resistor on second input pin for 50 ohm inputs
use 110 ohm serial resistor on second input pin for 93 ohm inputs

MODIFIED 12/17/2004 3:27:48 PM		Hierarchical_Page 0 Hierarchical_Page Total	
EED Department	ORIGINATOR	K.Bowie	DATE date
	DRAWN	K.Bowie	DATE date
	CHECKED	K.Bowie	DATE date
	APPROVED	approved	DATE date

Fermi National Accelerator Laboratory
United States Department of Energy

C:\Documents and Settings\bowie\Desktop\IPM_QIE_Board_GOL\IPM_QIE_Board.prj

.

SIZE	DRAWING NUMBER	REV
D	0000-ED-173522 Schematic Page 02 of 03	A

H=8ND; V=4LA

CIRCUIT B

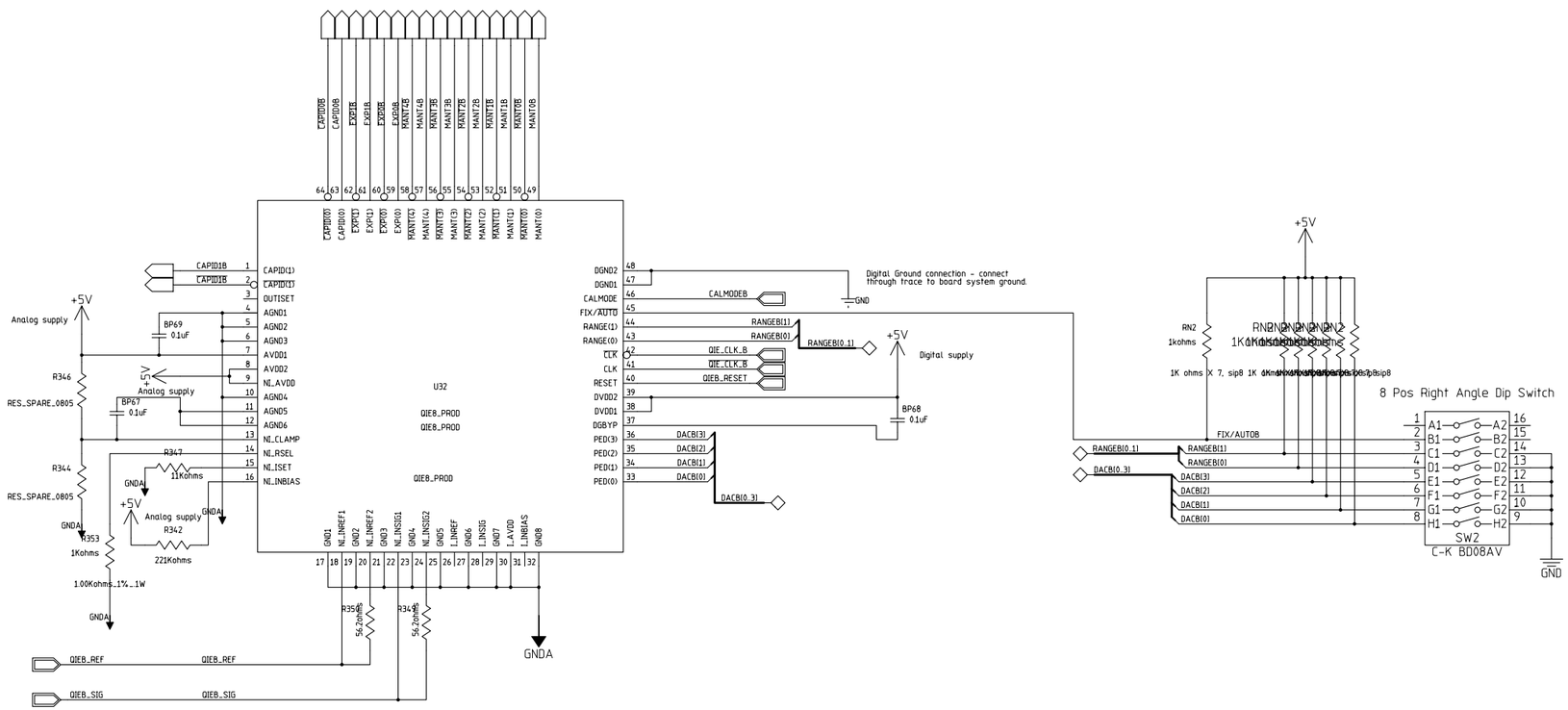

NI_INREF/NI_INSIG
use 56 ohm serial resistor on second input pin for 50 ohm inputs
use 110 ohm serial resistor on second input pin for 93 ohm inputs

MODIFIED 12/17/2004 3:28:28 PM		Hierarchical_Page 03 of 03	Hierarchical_Page Total
EED Department	ORIGINATOR	K.Bowie	DATE date
	DRAWN	K.Bowie	DATE date
	CHECKED	K.Bowie	DATE date
	APPROVED	approved	DATE date

Fermi National Accelerator Laboratory
United States Department of Energy

C:\Documents and Settings\bowie\Desktop\IPM_QIE_Board_GOL\IPM_QIE_Board.prj

SIZE	DRAWING NUMBER	REV
D	0000-ED-173522 Schematic Page 03 of 03	A

H=8ND; V=4LA