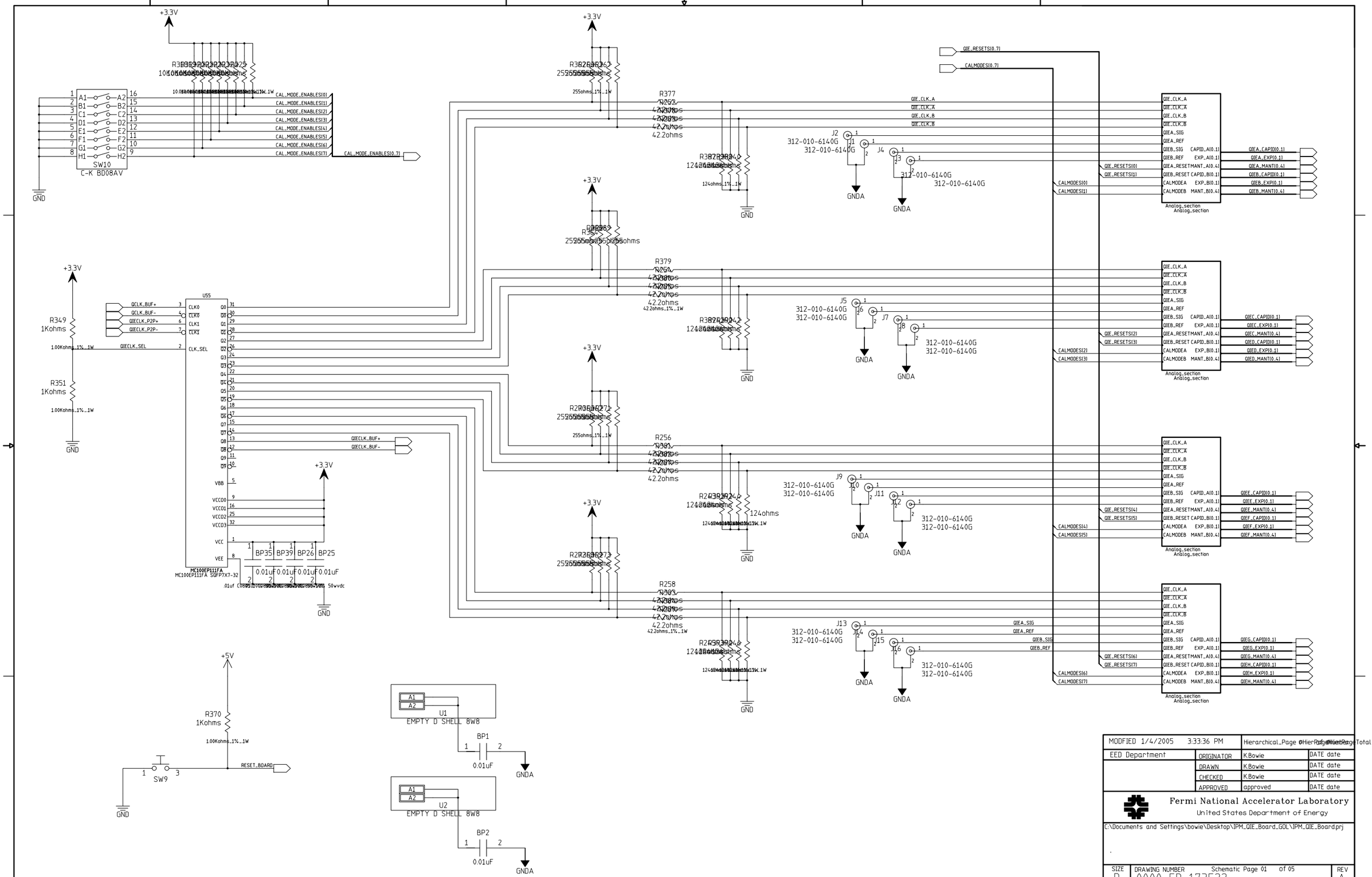
SW10
C-K BD08AV
CAL_MODE_ENABLES[0]
CAL_MODE_ENABLES[1]
CAL_MODE_ENABLES[2]
CAL_MODE_ENABLES[3]
CAL_MODE_ENABLES[4]
CAL_MODE_ENABLES[5]
CAL_MODE_ENABLES[6]
CAL_MODE_ENABLES[7]
CAL_MODE_ENABLES[0..7]
QIE_RESETS[0..7]
CALMODES[0..7]
R377
R379
R256
R258
42.2ohms
124ohms
255ohms
J2
J4
J5
J7
J9
J11
J13
J15
312-010-6140G
GNDA
GND
+3.3V
U55
MC100EP111FA
MC100EP111FA SOFP7X7-32
QCLK_BUF+
QCLK_BUF-
QIECLK_P2P+
QIECLK_P2P-
QIECLK_SEL
QIECLK_BUF+
QIECLK_BUF-
R349
1Kohms
R351
1Kohms
BP35
BP39
BP26
BP25
0.01uF
Analog_section
QIE_CLK_A
QIE_CLK_B
QIEA_SIG
QIEA_REF
QIEB_SIG
QIEB_REF
QIEA_RESET
QIEB_RESET
CALMODEA
CALMODEB
CAPID_A(0..1)
EXP_A(0..1)
MANT_A(0..4)
CAPID_B(0..1)
EXP_B(0..1)
MANT_B(0..4)
QIEA_CAPID(0..1)
QIEA_EXP(0..1)
QIEA_MANT(0..4)
QIEB_CAPID(0..1)
QIEB_EXP(0..1)
QIEB_MANT(0..4)
QIEC_CAPID(0..1)
QIEC_EXP(0..1)
QIEC_MANT(0..4)
QIED_CAPID(0..1)
QIED_EXP(0..1)
QIED_MANT(0..4)
QIEE_CAPID(0..1)
QIEE_EXP(0..1)
QIEE_MANT(0..4)
QIEF_CAPID(0..1)
QIEF_EXP(0..1)
QIEF_MANT(0..4)
QIEG_CAPID(0..1)
QIEG_EXP(0..1)
QIEG_MANT(0..4)
QIEH_CAPID(0..1)
QIEH_EXP(0..1)
QIEH_MANT(0..4)
+5V
R370
1Kohms
SW9
RESET_BOARD
U1
EMPTY D SHELL 8W8
U2
EMPTY D SHELL 8W8
BP1
BP2
MODIFIED 1/4/2005 3:33:36 PM
EED Department
ORIGINATOR K.Bowie DATE date
DRAWN K.Bowie DATE date
CHECKED K.Bowie DATE date
APPROVED approved DATE date
Fermi National Accelerator Laboratory
United States Department of Energy
C:\Documents and Settings\bowie\Desktop\IPM_QIE_Board_GOL\IPM_QIE_Board.prj
SIZE D
DRAWING NUMBER 0000-ED-173522
Schematic Page 01 of 05
REV A

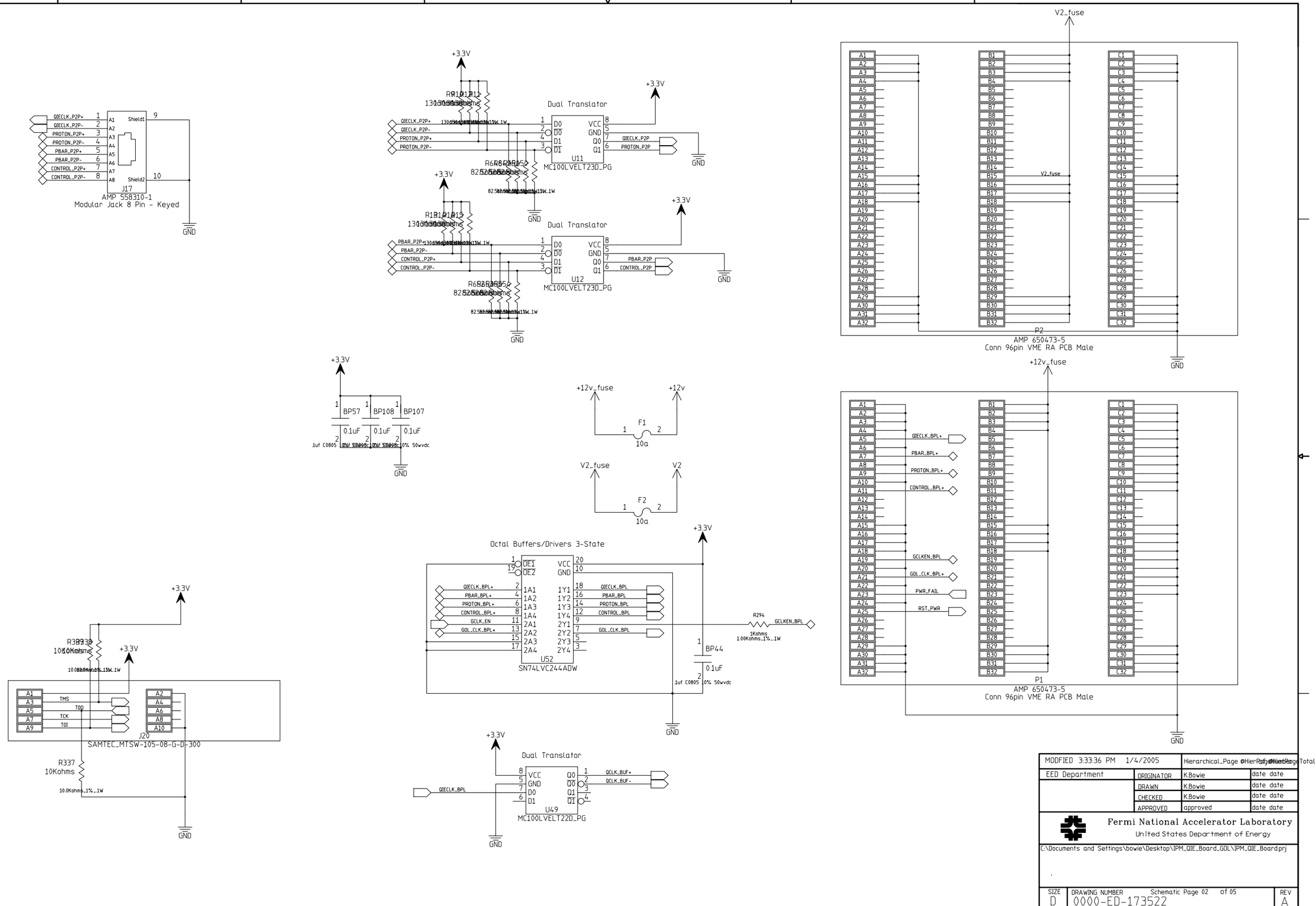

MODIFIED 3:33:36 PM 1/4/2005		Hierarchical_Page 0 of Hierarchical_Page Total	
EED Department	ORIGINATOR	K.Bowie	date date
	DRAWN	K.Bowie	date date
	CHECKED	K.Bowie	date date
	APPROVED	approved	date date

Fermi National Accelerator Laboratory
United States Department of Energy

C:\Documents and Settings\bowie\Desktop\IPM_QIE_Board_GOL\IPM_QIE_Board.prj

SIZE	DRAWING NUMBER	REV
D	0000-ED-173522 Schematic Page 02 of 05	A

H=8ND; V=4LA

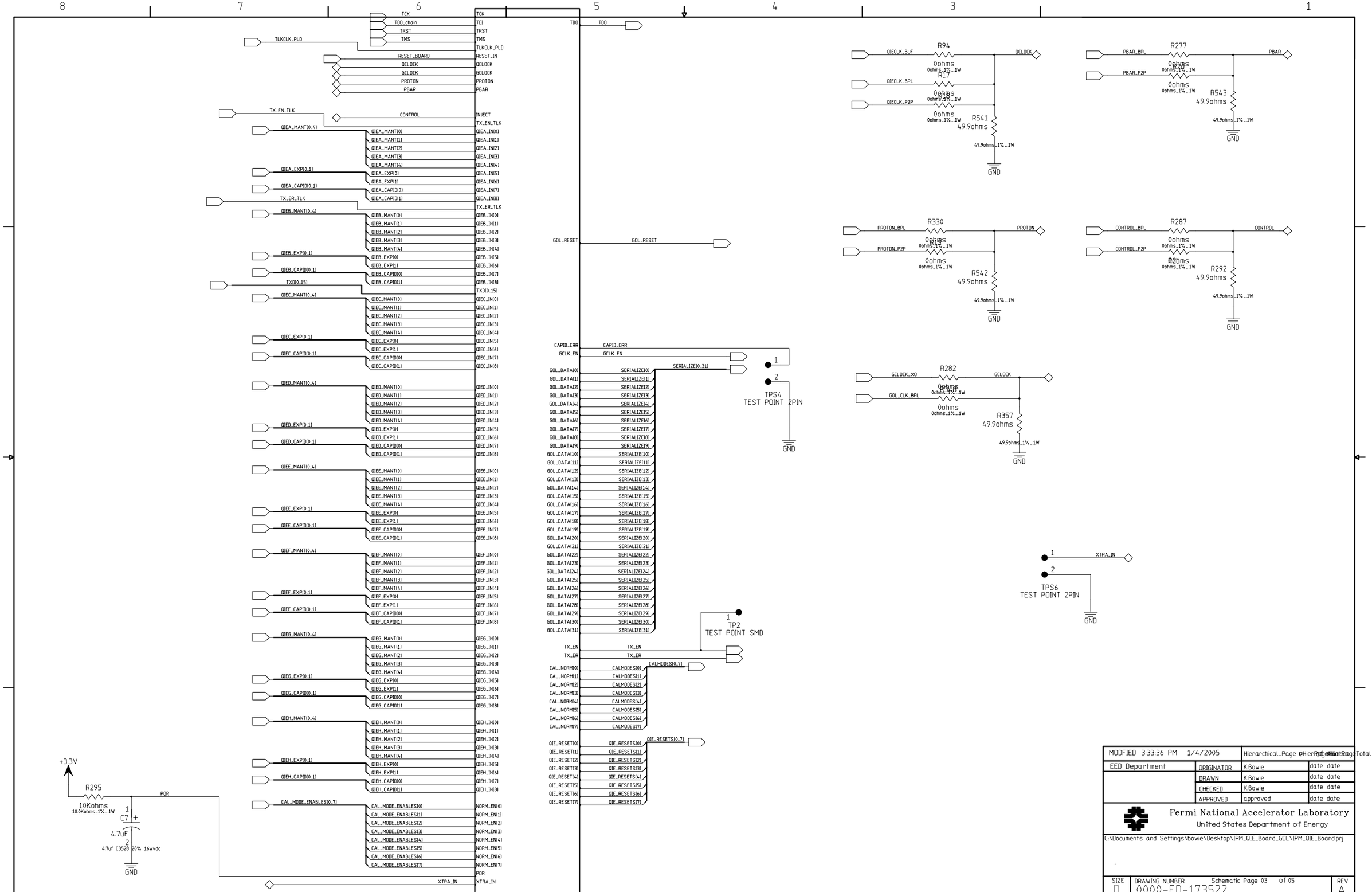

MODIFIED 3:33:36 PM 1/4/2005		Hierarchical_Page 0 of Hierarchical_Page Total	
EED Department	ORIGINATOR	K.Bowie	date date
	DRAWN	K.Bowie	date date
	CHECKED	K.Bowie	date date
	APPROVED	approved	date date

Fermi National Accelerator Laboratory
United States Department of Energy

C:\Documents and Settings\bowie\Desktop\IPM_QIE_Board_GOL\IPM_QIE_Board.prj

SIZE	DRAWING NUMBER		REV
D	0000-ED-173522	Schematic Page 03 of 05	A

H=8ND; V=4LA

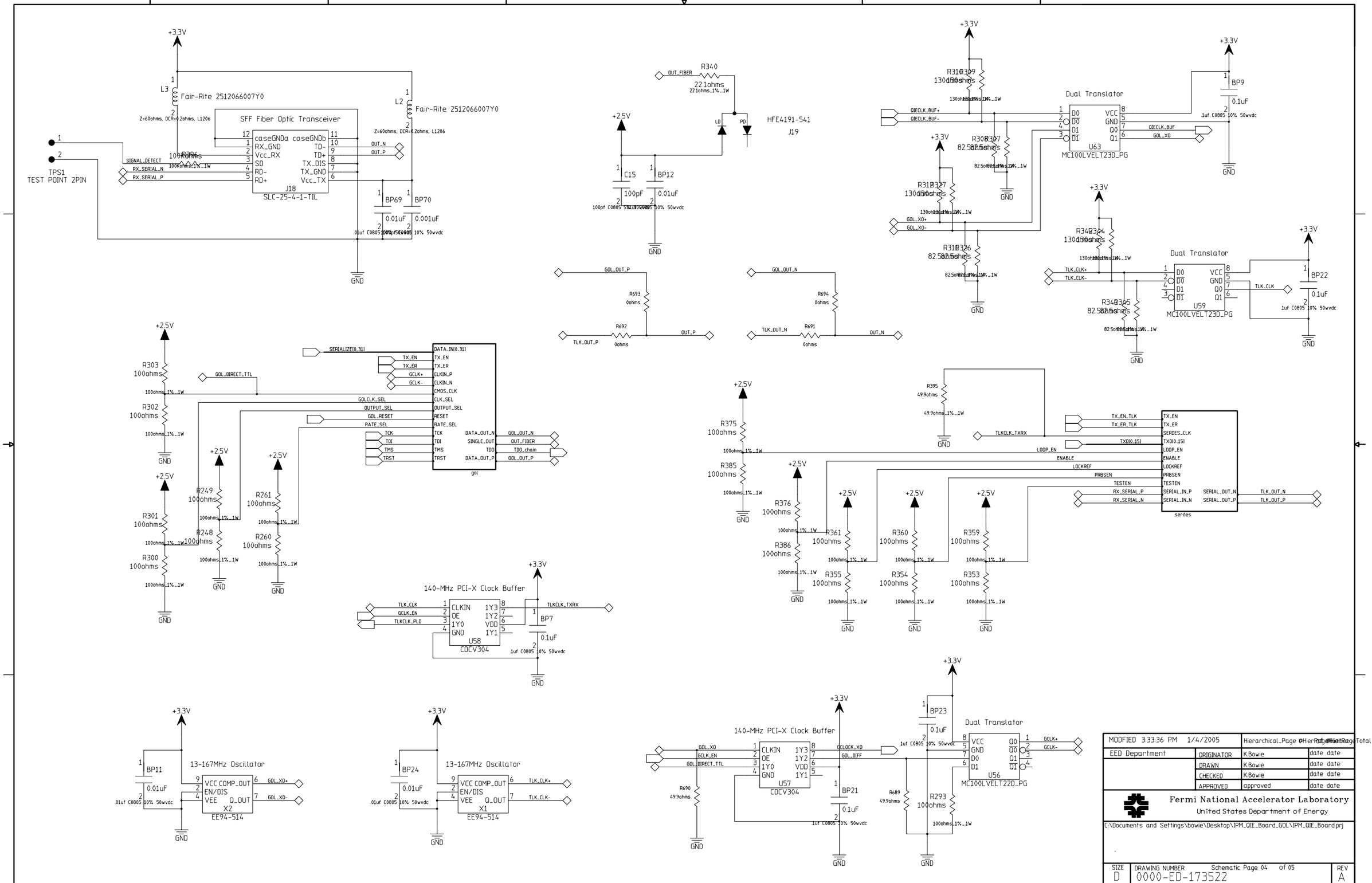
SFF Fiber Optic Transceiver
caseGNDa caseGNDb
RX_GND
Vcc_RX
SD
RD-
RD+
TD-
TD+
TX_DIS
TX_GND
Vcc_TX
J18
SLC-25-4-1-TIL
Fair-Rite 2512066007Y0
Z=60ohms, DCR=0.2ohms, L1206
TPS1
TEST POINT 2PIN
SIGNAL_DETECT
RX_SERIAL_N
RX_SERIAL_P
OUT_N
OUT_P
HFE4191-541
J19
OUT_FIBER
R340
22.1ohms
Dual Translator
MC100LVELT23D_PG
U63
U59
QIECLK_BUF+
QIECLK_BUF-
QIECLK_BUF
GOL_XO
GOL_XO+
GOL_XO-
TLK_CLK+
TLK_CLK-
TLK_CLK
GOL_OUT_P
GOL_OUT_N
TLK_OUT_P
TLK_OUT_N
DATA_IN[0.31]
SERIALIZE[0.31]
GOL_DIRECT_TTL
GOLCLK_SEL
OUTPUT_SEL
GOL_RESET
RATE_SEL
DATA_OUT_N
SINGLE_OUT
DATA_OUT_P
TDO_chain
gol
140-MHz PCI-X Clock Buffer
CLKIN
OE
1Y0
GND
1Y3
1Y2
VDD
1Y1
U58
CDCV304
TLKCLK_TXRX
13-167MHz Oscillator
VCC COMP_OUT
EN/DIS
VEE Q_OUT
X2
EE94-514
X1
U57
U56
MC100LVELT22D_PG
TXD[0.15]
LOOP_EN
ENABLE
LOCKREF
PRBSEN
TESTEN
SERIAL_IN_P
SERIAL_IN_N
SERIAL_OUT_N
SERIAL_OUT_P
serdes
MODIFIED 3:33:36 PM 1/4/2005
EED Department
ORIGINATOR K.Bowie
DRAWN K.Bowie
CHECKED K.Bowie
APPROVED approved
Fermi National Accelerator Laboratory
United States Department of Energy
C:\Documents and Settings\bowie\Desktop\IPM_QIE_Board_GOL\IPM_QIE_Board.prj
SIZE D
DRAWING NUMBER 0000-ED-173522
Schematic Page 04 of 05
REV A

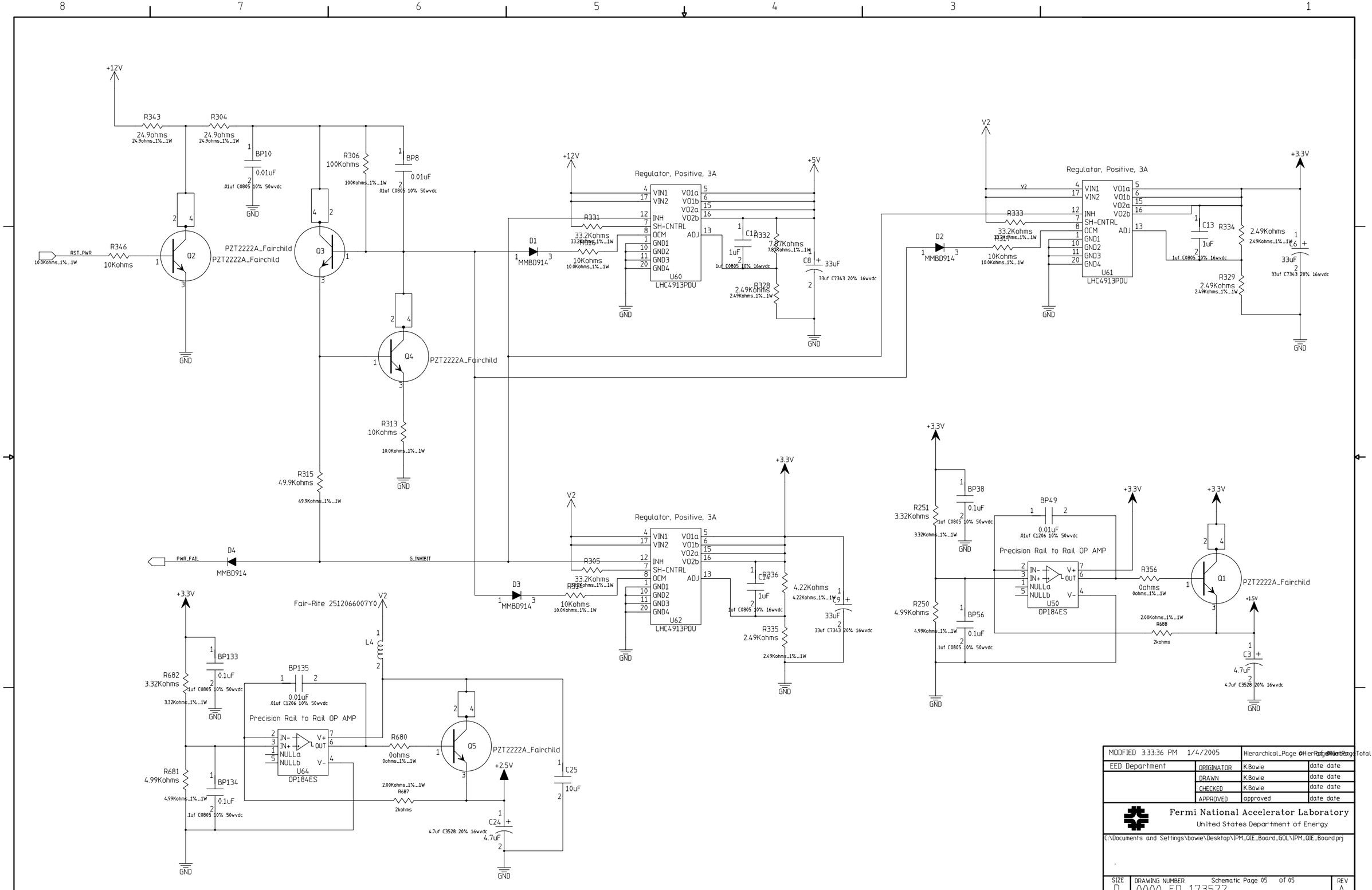

MODIFIED 3:33:36 PM 1/4/2005		Hierarchical_Page 0 Hierarchical_Page Total	
EED Department	ORIGINATOR	K.Bowie	date date
	DRAWN	K.Bowie	date date
	CHECKED	K.Bowie	date date
	APPROVED	approved	date date

Fermi National Accelerator Laboratory
United States Department of Energy

C:\Documents and Settings\bowie\Desktop\IPM_QIE_Board_GOL\IPM_QIE_Board.prj

SIZE	DRAWING NUMBER	REV
D	0000-ED-173522	A

Schematic Page 05 of 05

H=8ND; V=4LA