DWG. NO.	SH.	REV

REVISIONS

REV	DESCRIPTION	DATE	APPROVED

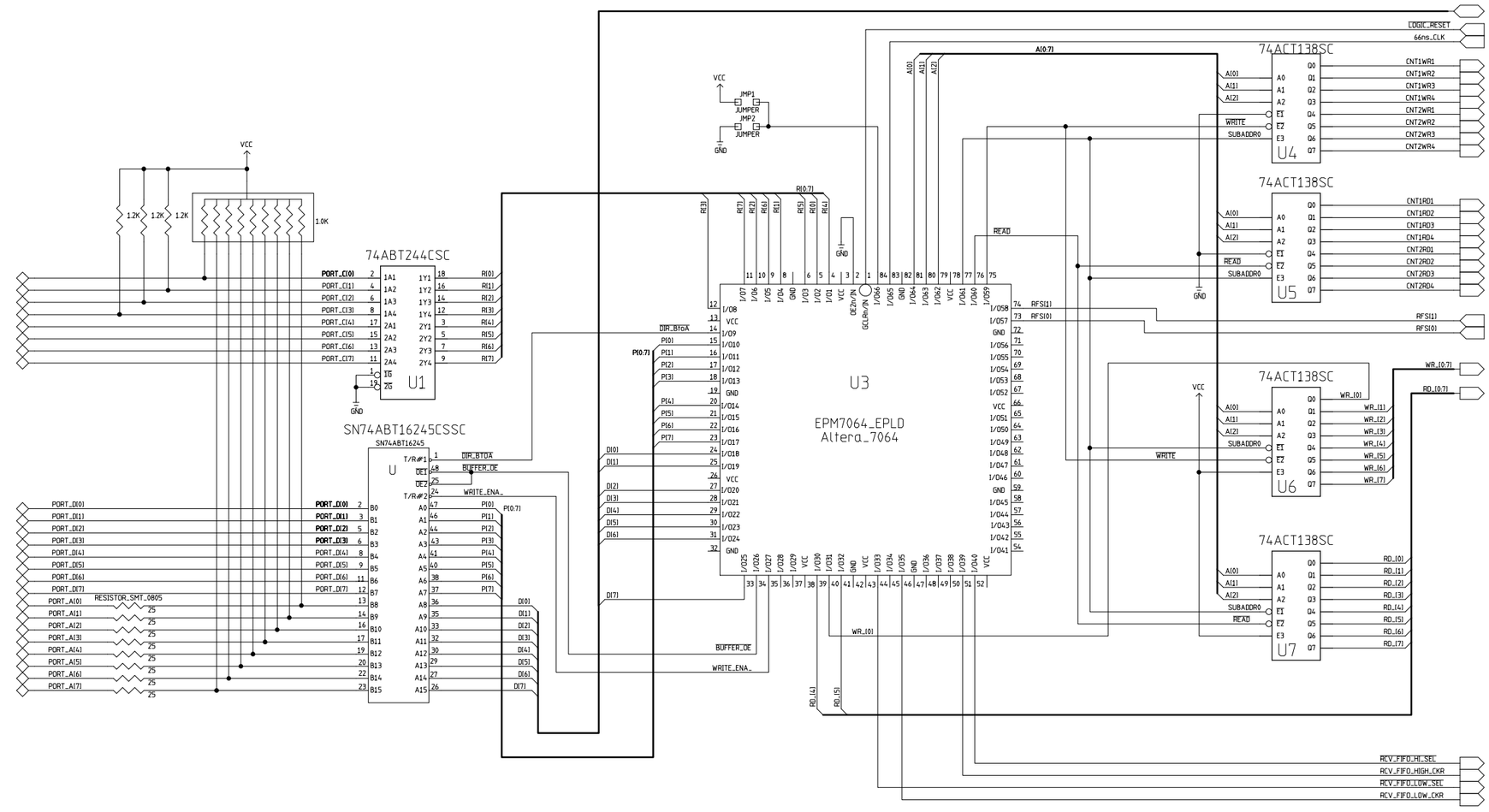

READ DATA (PORT A)
READ PORT (PORT D)

3m3431-5302

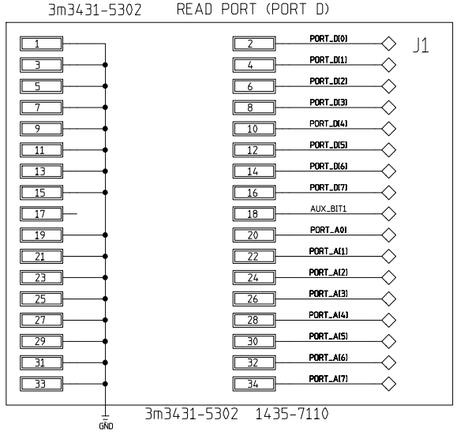

3m3431-5302 1435-7110

WRITE DATA (PORT A)
WRITE PORT (PORT C)

3m3431-5302

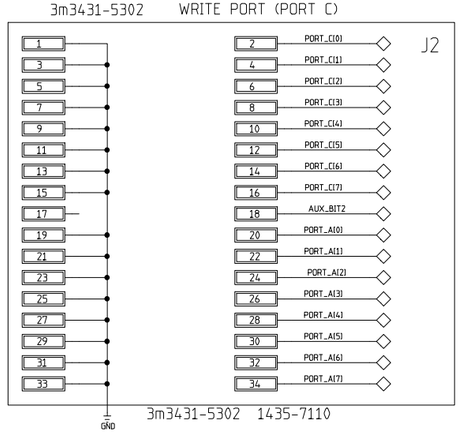

3m3431-5302 1435-7110

36PinCentronics

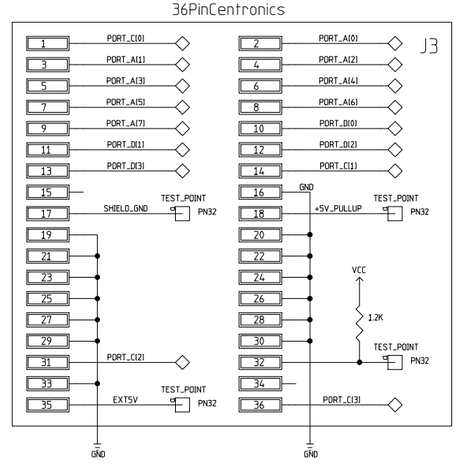

CONTRACT NO.		FERMI NATIONAL ACCELERATOR LABORATORY
APPROVALS	DATE	CDF SHOWER MAX SMD CRATE DIAGNOSTICS INTERFACE
DRAWN CRAIG DRENNAN	4/2/98	
CHECKED		
ISSUED		SIZE D · FSCM NO. · DWG. NO. · REV
		SCALE · SHEET 1 of 8

H=8ND; V=4LA

DWG. NO.	SH.	REV

REVISIONS

REV	DESCRIPTION	DATE	APPROVED

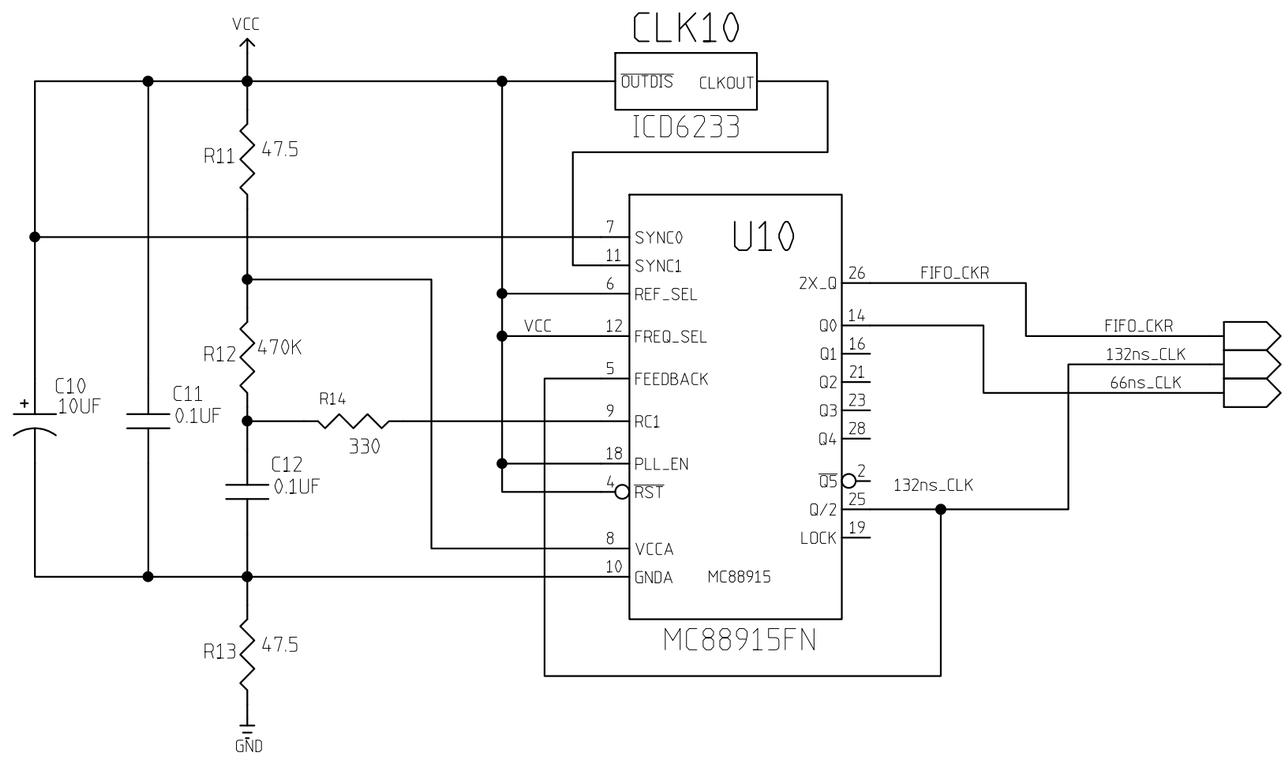

CONTRACT NO.		FERMI NATIONAL ACCELERATOR LABORATORY			
APPROVALS	DATE	CDF SHOWER MAX SMD CRATE DIAGNOSTICS INTERFACE			
DRAWN CRAIG DRENNAN	2/2/98				
CHECKED		SIZE B	FSCM NO.	DWG. NO.	REV
ISSUED					
		SCALE		SHEET 2 of 8	

H=2LA; V=2LA

DWG. NO.	SH.	REV

REVISIONS

REV	DESCRIPTION	DATE	APPROVED

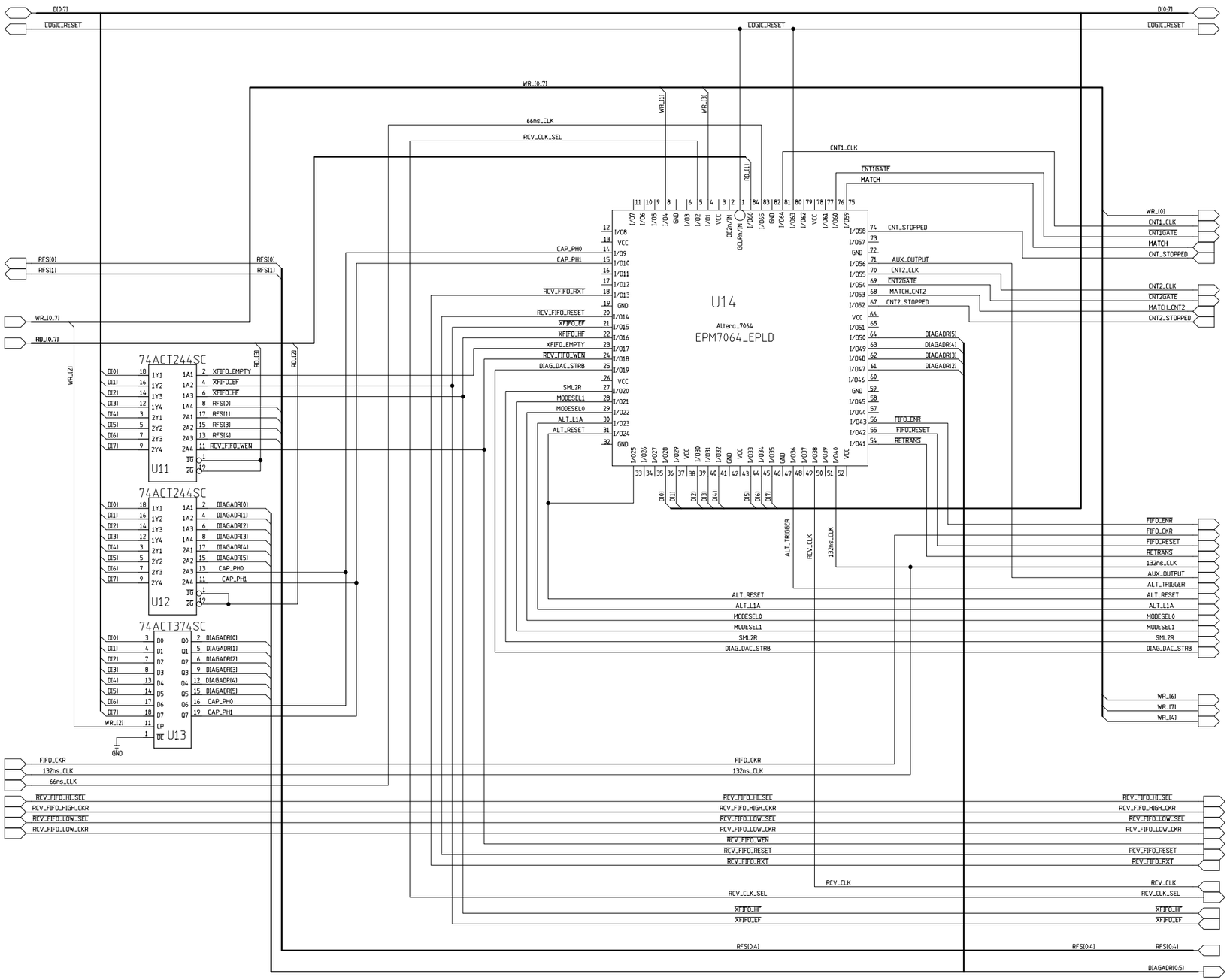

CONTRACT NO.		FERMI NATIONAL ACCELERATOR LABORATORY
APPROVALS	DATE	CDF SHOWER MAX SMD CRATE DIAGNOSTICS INTERFACE
DRAWN CRAIG DRENNAN	4/2/98	
CHECKED		
ISSUED		SIZE D · FSCM NO. · DWG. NO. · REV
		SCALE · SHEET 3 of 8

H=8ND; V=4LA

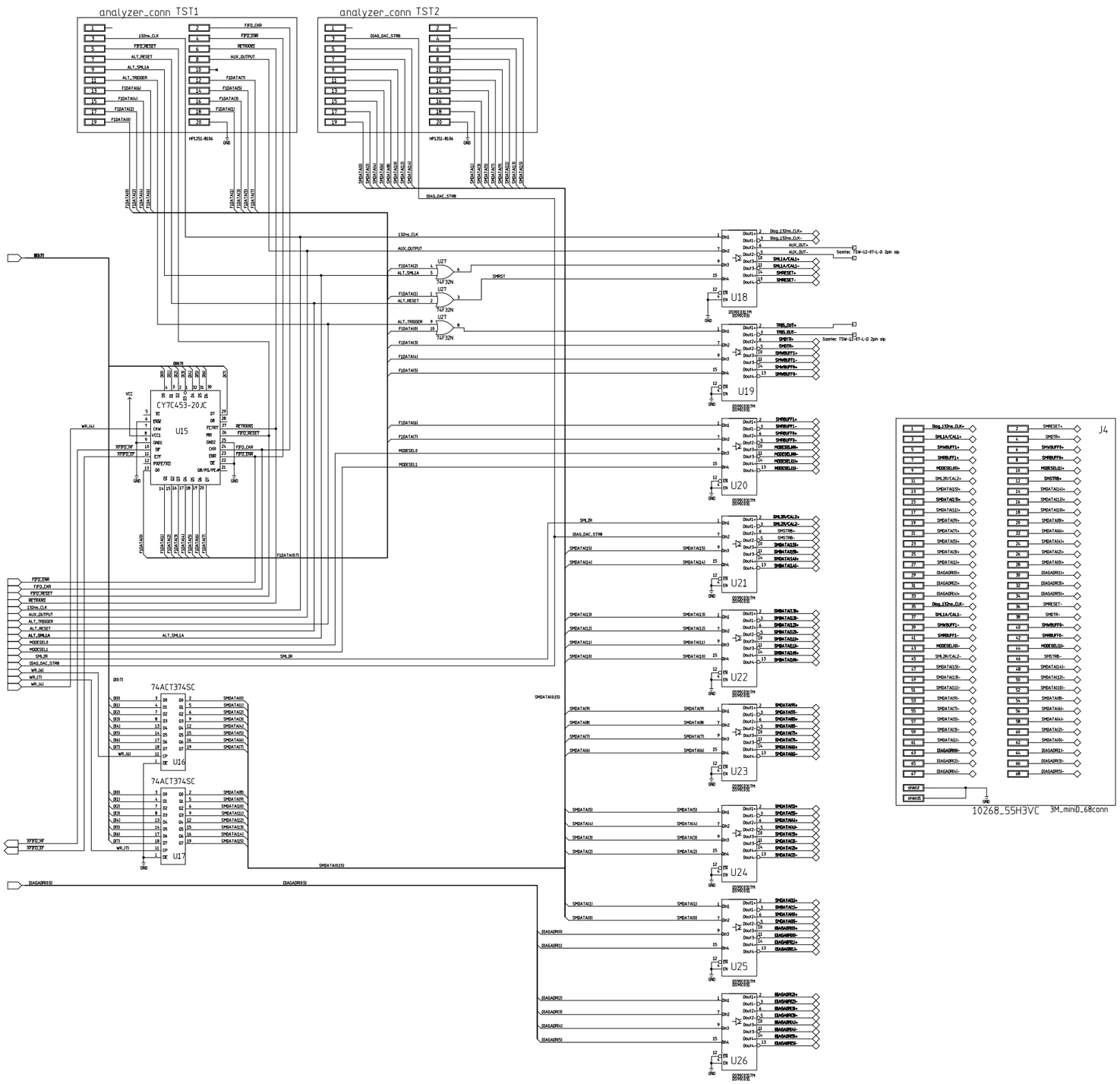

REVISIONS			
REV	DESCRIPTION	DATE	APPROVED

CONTRACT NO.	FERMI NATIONAL ACCELERATOR LABORATORY	
APPROVALS / DATE	CDF SHOWER MAX SMD CRATE DIAGNOSTICS INTERFACE	
DRAWN: CRAIG DRENNAN 4/2/98		
CHECKED		
ISSUED	SIZE: E / FSCM NO. / DWG. NO.	REV
	SCALE	SHEET 4 of 8

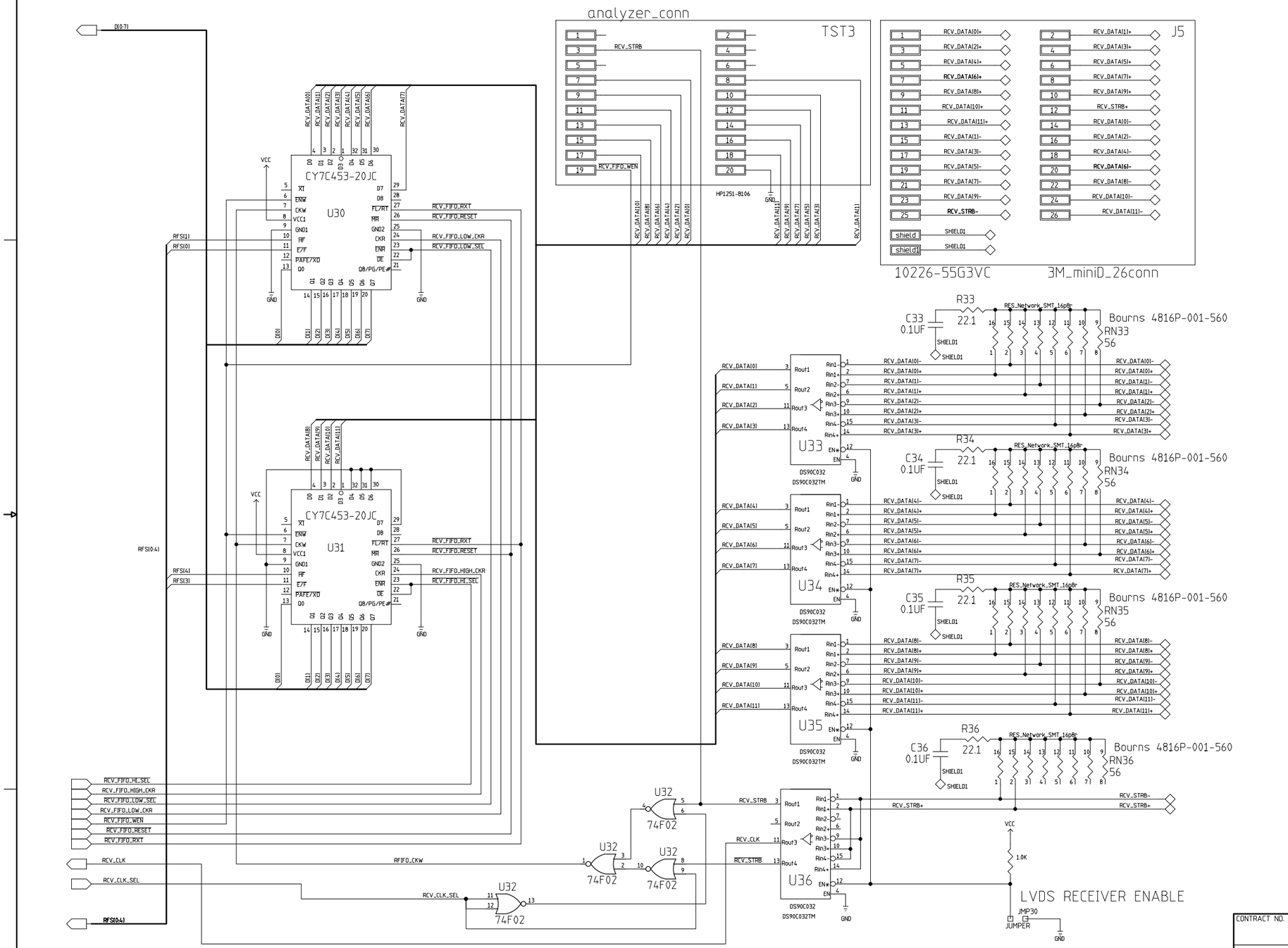

REVISIONS			
REV	DESCRIPTION	DATE	APPROVED

CONTRACT NO.	FERMI NATIONAL ACCELERATOR LABORATORY
APPROVALS / DATE	CDF SHOWER MAX SMD CRATE DIAGNOSTICS INTERFACE
DRAWN CRAIG DRENNAN 4/2/98	
CHECKED	
ISSUED	SIZE D / FSCM NO. / DWG. NO. / REV
	SCALE / SHEET 5 of 8

H=8ND; V=4LA

DWG. NO.	SH.	REV

REVISIONS

REV	DESCRIPTION	DATE	APPROVED

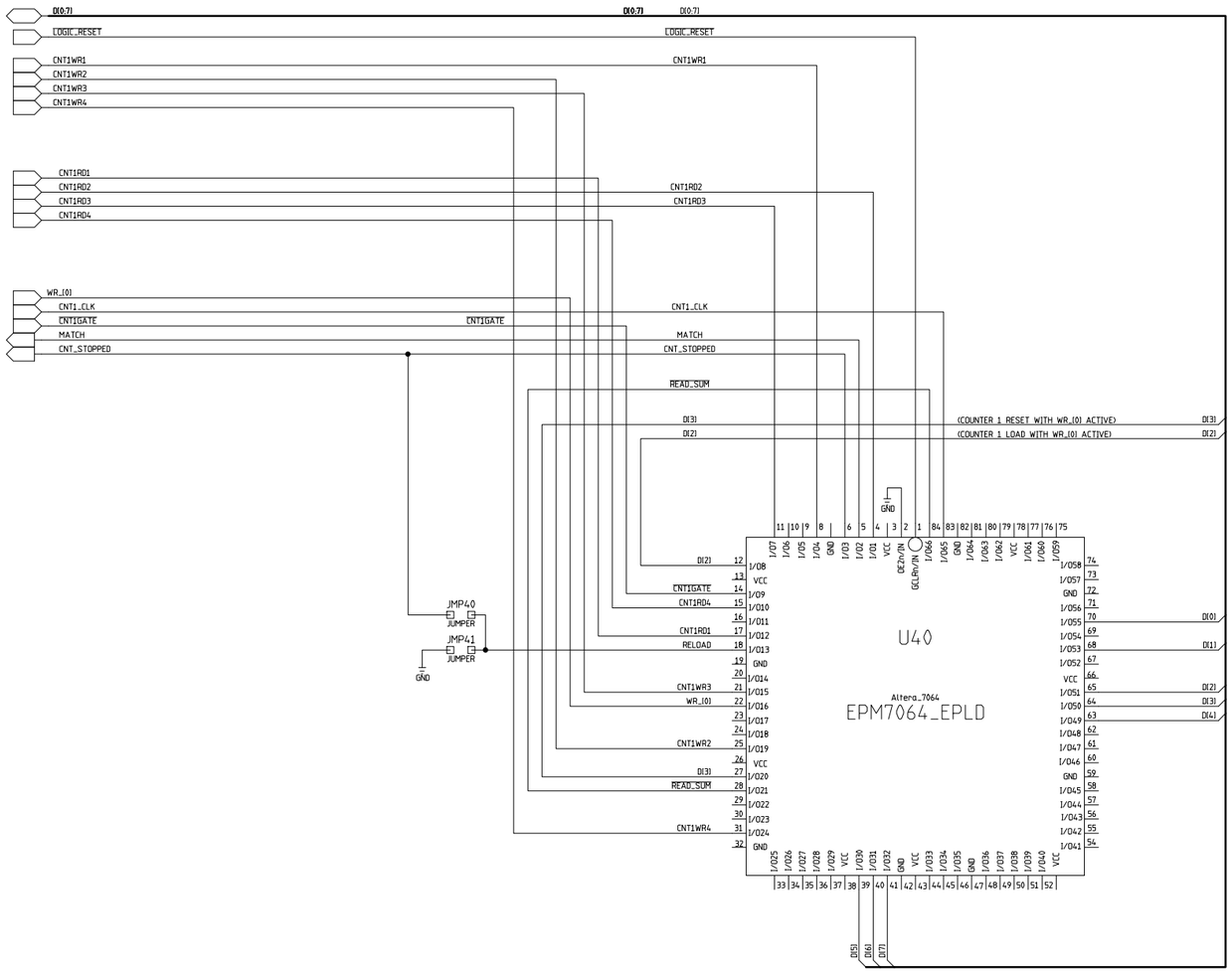

CONTRACT NO.		FERMI NATIONAL ACCELERATOR LABORATORY
APPROVALS	DATE	CDF SHOWER MAX SMD CRATE DIAGNOSTICS INTERFACE
DRAWN CRAIG DRENNAN	2/2/98	
CHECKED		
ISSUED		SIZE D · FSCM NO. · DWG. NO. · REV
		SCALE · SHEET 6 of 8

H=8ND; V=4LA

DWG. NO.	SH.	REV

REVISIONS

REV	DESCRIPTION	DATE	APPROVED

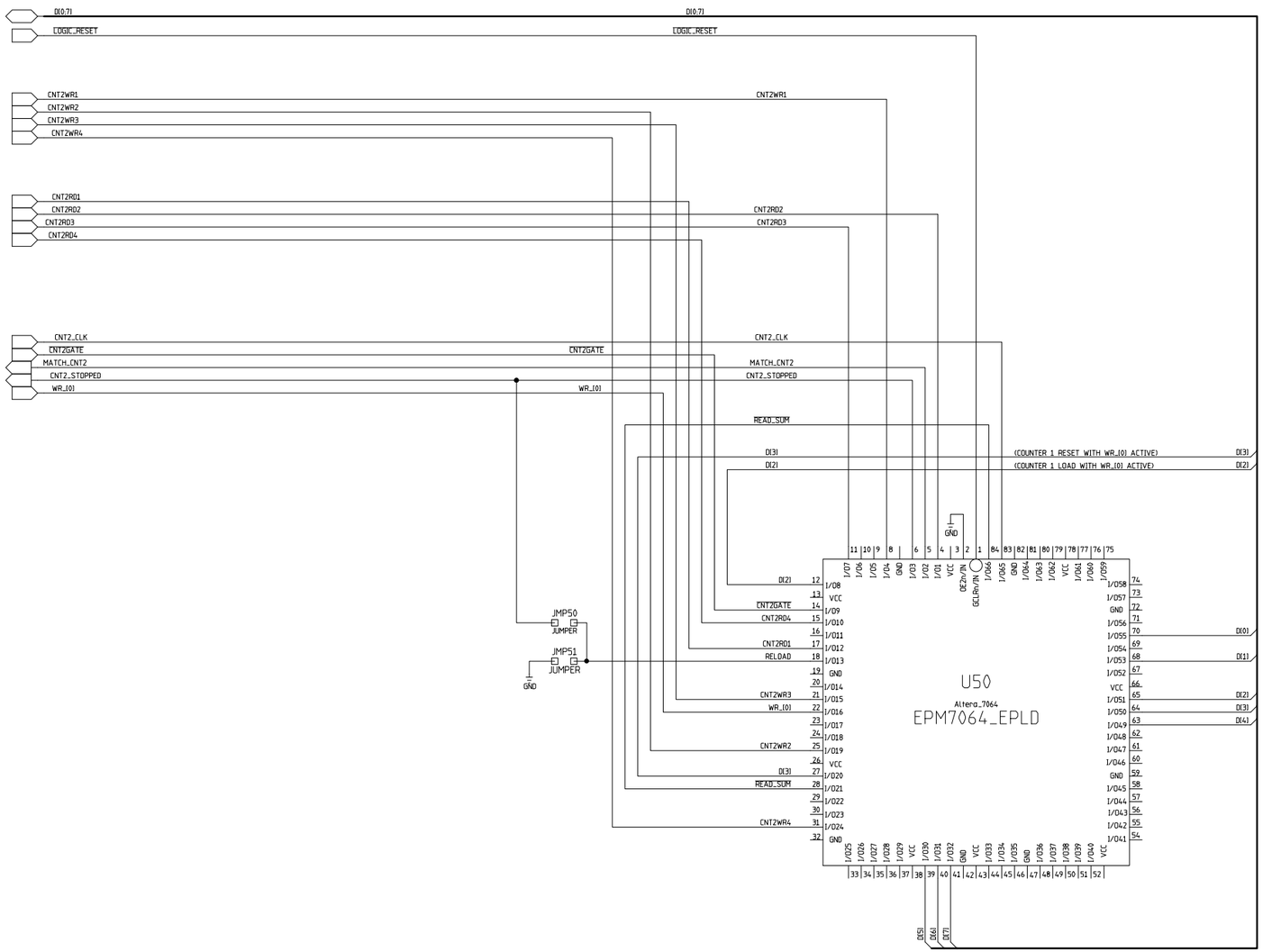

CONTRACT NO.		FERMI NATIONAL ACCELERATOR LABORATORY
APPROVALS	DATE	CDF SHOWER MAX SMD CRATE DIAGNOSTICS INTERFACE
DRAWN CRAIG DRENNAN	2/2/98	
CHECKED		
ISSUED		SIZE D · FSCM NO. · DWG. NO. · REV
		SCALE · SHEET 7 of 8

H=8ND; V=4LA

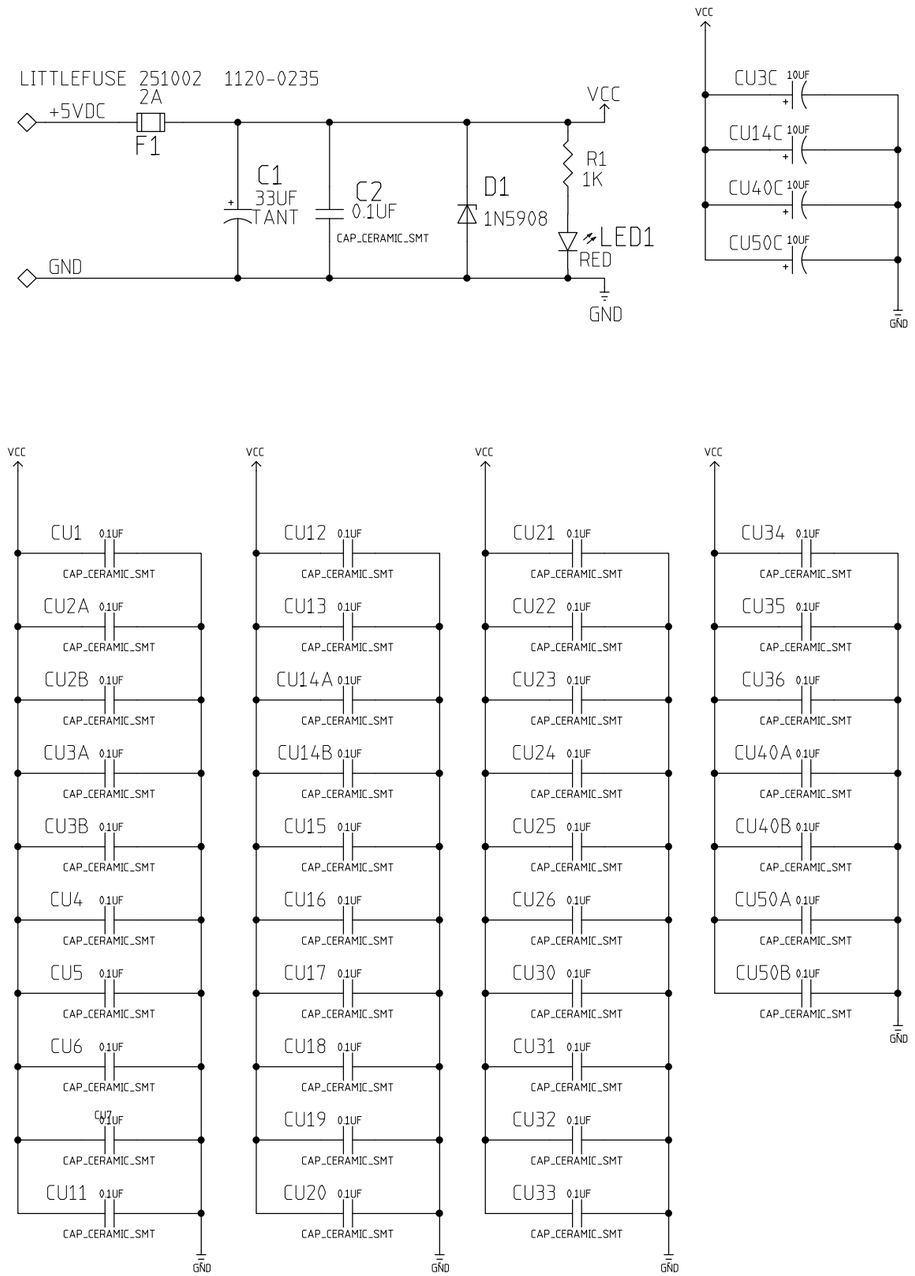

REVISIONS			
REV	DESCRIPTION	DATE	APPROVED

CONTRACT NO.		FERMI NATIONAL ACCELERATOR LABORATORY
APPROVALS	DATE	CDF SHOWER MAX SMD CRATE DIAGNOSTICS INTERFACE
DRAWN CRAIG DRENNAN	2/2/98	
CHECKED		SIZE C · FSCM NO. · DWG. NO. · REV
ISSUED		SCALE · SHEET 8 of 8

DWG NO. · SH. · REV

H=4ND; V=4LA