MINERνA
Electrical Documentation
September 15, 2009

Contact: Linda Bagby
bagby@fnal.gov
x3100

Location: MINOS Near Detector Hall

The MINERνA experiment is currently being built in the MINOS Underground Hall. Several Module Sets, 4 out of 27, have been instrumented. The experiment requests PORC approval for unattended operation of the electronics.

Contents

1 Introduction 3
2 Cable Plant-Rack Layout 3
3 AC Power Distribution 4
4 DC Power Distribution 5

MINERνA Electronics System

1 Introduction

The MINERνA Test Prototype installation has been reviewed and granted ORC approval. The equipment currently installed is the same as in the Test Prototype. Several improvements from the Test Prototype installation have been implemented. The experiment seeks ORC approval to operate instrumented Module Sets. The installation is ongoing. The intent is to operate the experiment as the installation progresses. All documentation regarding this MINERνA ORC request can be found at http://www-ppd.fnal.gov/EEDOffice-w/Projects/CMS/Minerva/ORC_Index.html Previous ORC documentation can be found at http://www-ppd.fnal.gov/EEDOffice-w/Projects/CMS/Minerva/Veto_ORC_Index.html

2 Rack Layout-Cable Plant

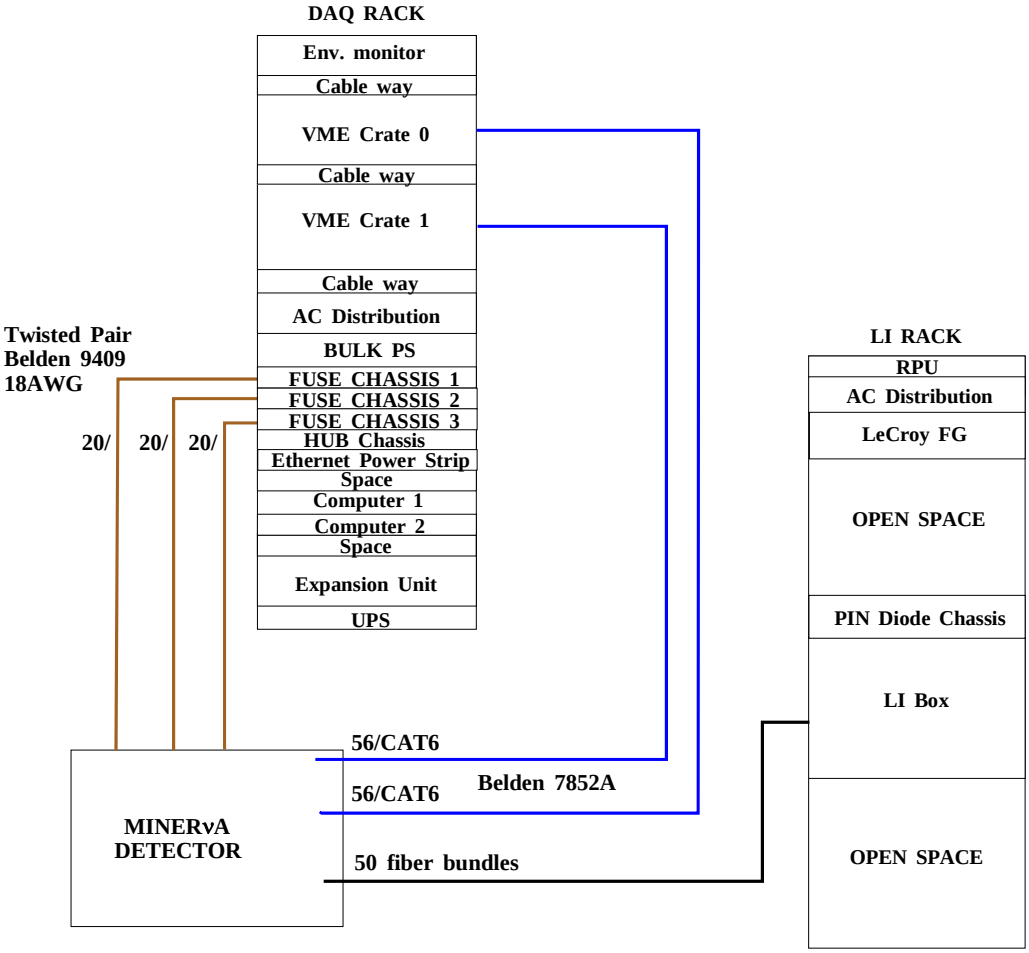

Figure 1: MINERνA Rack Layout and Cable Plant

The DAQ rack consists of an Environmental Monitor, two VME crates, an AC Distribution Box, Bulk Power Supply, three Fuse Panels, HUB chassis, Ethernet Power Strip, two computers, an Expansion Unit, and an Uninterruptable Power Supply (UPS).

The LI rack contains the Rack Protection System (RPS), AC Distribution Box, LeCroy Function Generator, PIN Monitor Box, and the LI Box.
Technical specifications for the equipment can be found here http://www-ppd.fnal.gov/EEDOffice-w/Projects/CMS/Minerva/FINAL_ORC/Elt_Specs.html

The cable plant consists of 3 types of cable bundles. DC Power is provided by Belden 9409, two-conductor, 18AWG, jacketed twisted pair. This cable is routed from one of three fuse panels in the DAQ rack to Front End Support Boards (FESB), located on the end of the PMT racks mounted above the detector modules. The LVDS readout uses Belden 7852A, CAT6 cable. 112 cables run from the VME crates in the DAQ rack to Front End Boards (FEB) mounted on PMTs. Both of these cables have been flame tested and approved for underground use. In addition to the copper cables, there are 50 twenty-fiber bundles that run from the Light Injection (LI) rack to each of the PMTs.

3 AC Power Distribution

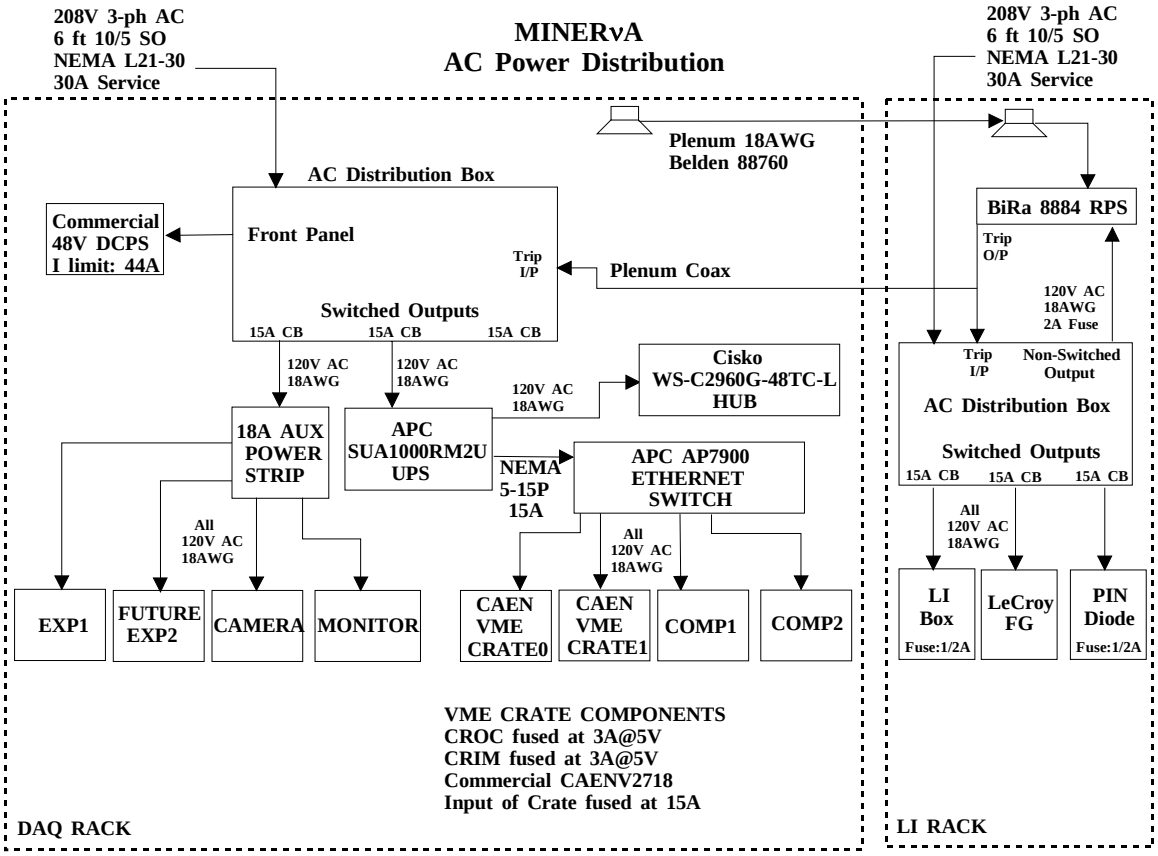

Figure 2: AC Power Distribution

Figure 2 illustrates the AC power distribution within the DAQ and LI racks. The Rack Protection System (RPS) is installed in the LI rack. It is powered from the unswitched output on the AC Distribution box. The smoke detector in the LI rack is daisy chained to the smoke detector in the DAQ rack. The interlock output from the RPS is also daisy chained to the DAQ rack AC Distribution Box. All inter-rack power cords are 120V 18AWG.

4 DC Power Distribution

The DC Power distribution is explained in detail here http://www-ppd.fnal.gov/EEDOffice-w/Projects/CMS/Minerva/Elect/Power_Dist.pdf
Cord Ends are used to terminate the 18AWG twisted pair in the DC Power Distribution circuit. Figure 3 illustrates the ampacity calculation which shows that the cord ends comply with the 1000A/in^2 safety guideline regardless of the blade orientation inside the compression fit connectors on the FESB and 48V power supply fuse panel.

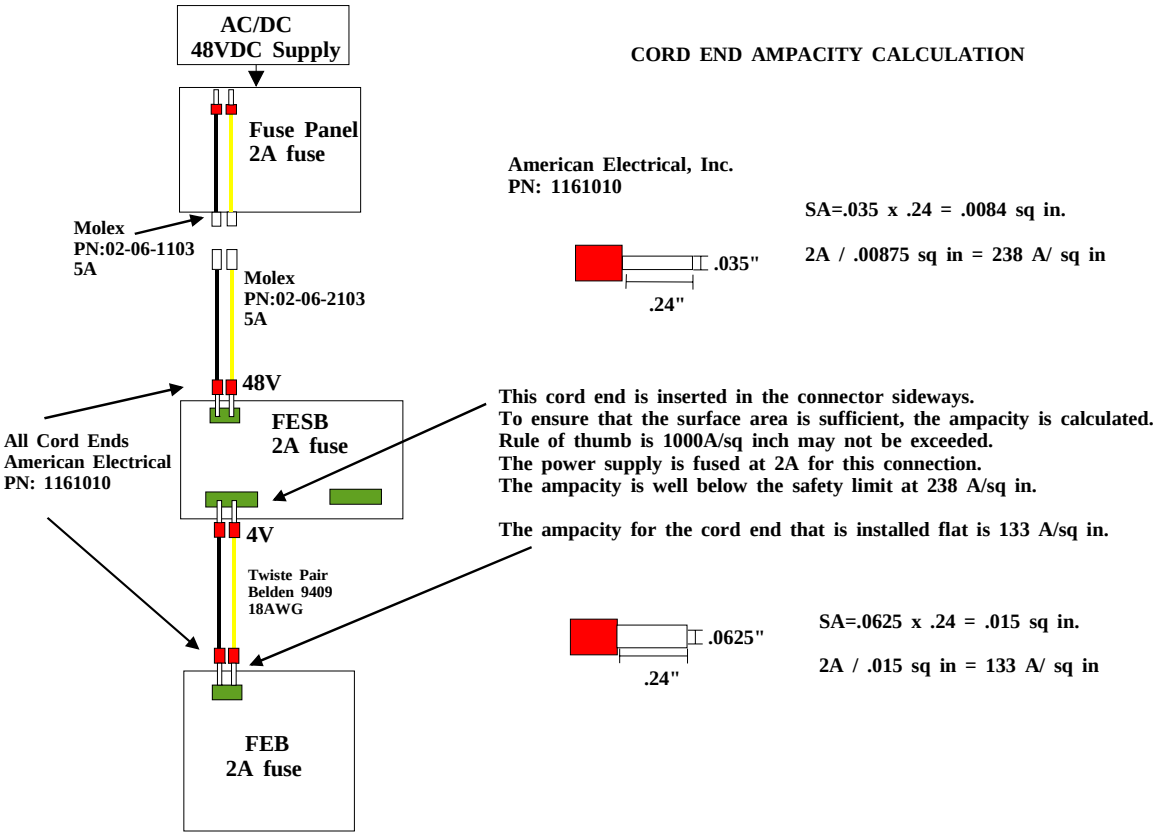

Figure 3: DC Distribution and Cord End Ampacity Calculation