MINERνA Mtest (T-977) DAQ and LI/HV Rack Electrical Documentation

April 22, 2010

Contact: Linda Bagby
bagby@fnal.gov
x3100

Location: Mtest beam enclosure and the west side enclosure entrance area.

The MINERνA experiment is constructing a Test Beam experiment at Mtest. The electronics racks for the experiment include a DAQ rack and a LI/HV rack. We request ORC approval to operate the equipment unattended.

Contents

1 Introduction 3
2 Rack Locations and Equipment Stack 3
3 Electronics Specifications 4
4 AC Power Distribution 5
5 DC Power 7
6 Trigger System High Voltage 10
7 Rack Protection 10

MINERνA Mtest Electronics System

1 Introduction

The Minerva Collaboration constructed a Test Beam detector in the Highbay area of the Mtest building. This detector structure has been moved into the test beam enclosure area. The Test Beam detector consists of scintillating fiber modules mounted on a frame and is read out by the production Minerva electronics system. This system consists of two electronics racks, DAQ (Data Acquisition) and LI/HV (Light Injection/High Voltage). Additional electronics, Photomultiplier tubes (PMT), Front End Boards (FEB), and Front End Support Boards (FESB) are mounted on the frame which holds the detector modules. In addition to the scintillating modules, the Trigger system consists of scintillating panels mounted on the North and South ends of the module framework. The High Voltage for the PMTs associated with this system is housed in the LI/HV Rack.

2 Rack Locations and Equipment Stack

Figure 1 illustrates the location of the DAQ and LI/HV Electronics racks to be used during Minerva Test Beam operations. The DAQ rack is located outside the beam enclosure, south of the Key Tree. The LI/HV rack will be inside the enclosure, west of the detector frame. The detector modules, PMTs, FEBs, FESBs, and trigger panels are located at MT6-2B.

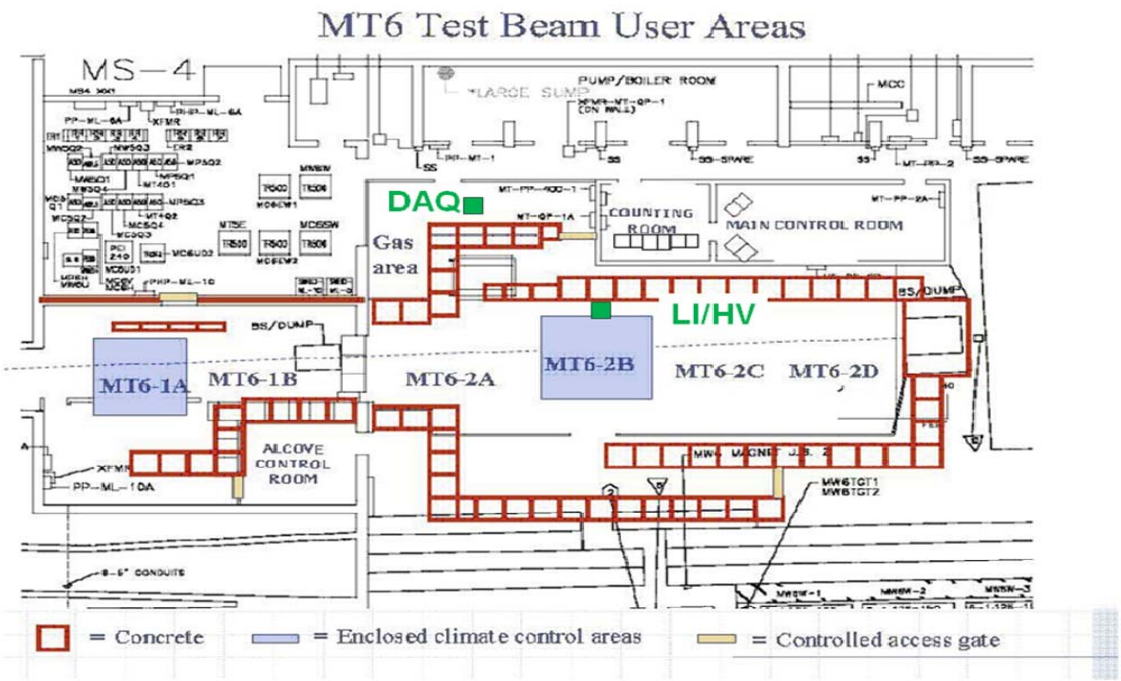

Figure 1: DAQ and LI/HV Electronics Racks Location

Figure 2 illustrates the equipment housed in the racks. The DAQ rack contains a Rack Protection Unit (RPU), CAEN 8011 VME crate, Fermi designed AC Distribution Box, a fuse panel, a commercially available Power Distribution Unit (PDU), Linux PC, and an Uninterruptable Power Supply (UPS).

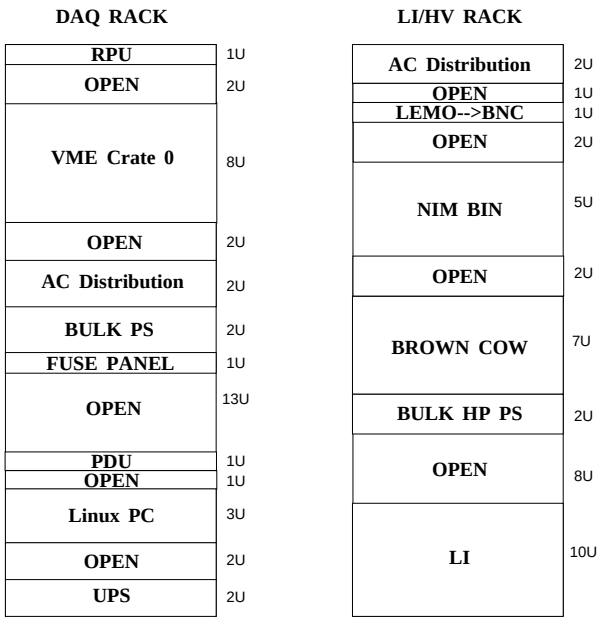

Figure 2: Mtest DAQ and LI/HV Rack Equipment Stack

The LI/HV rack contains another Fermi designed AC Distribution Box, a passive component LEMO to BNC converter, and a University of Pittsburg designed Light Injection Box (LI). Commercially available equipment, obtained from PREP, includes a NIM Bin, High Voltage Divider (Brown Cow), and Fluke 415B High Voltage Power Supply.

3 Electronics Specifications

The DAQ rack equipment specifications can be found at the following links.

BiRa 8884 Rack Protection Unit
http://www-ppd.fnal.gov/EEDOffice-w/Projects/CMS/Minerva/Elect/bira_8884.pdf

CAEN VME Crate 8011
http://www-ppd.fnal.gov/EEDOffice-w/Projects/CMS/Minerva/Elect/VME8011.pdf

AC Distribution Box
http://www-ppd.fnal.gov/EEDOffice-w/Projects/CMS/Minerva/FINAL_ORC/AC_Dist_Mod.pdf

Fluke 415B (Bulk Power Supply) 3kV@30A
http://www-css.fnal.gov/els/prep/catalog/hardware_info/fluke/415b.html

Fuse Panel
http://minerva-docdb.fnal.gov:8080/cgi-bin/ShowDocument?docid=2254

Power Distribution Unit (PDU)
http://www-ppd.fnal.gov/EEDOffice-w/Projects/CMS/Minerva/Elect/PDU.pdf

Linux PC
http://www-ppd.fnal.gov/EEDOffice-w/Projects/CMS/Minerva/Elect/SC833T-650.pdf

Uninterruptable Power Supply (UPS)
http://www.apcc.com/products/resource/include/techspec_index.cfm?base_sku=SUA2200RM2U&total_watts=50

Specifications to the PC boards in the VME crate and mounted on the detector framework are as follows:

CAEN V2718 VME Controller
http://www.caen.it/getattach.php?mod=V2718&obj=mn&id=2250

CRIM: Fused for 3A@5V.
http://www-ppd.fnal.gov/EEDOffice-w/Projects/CMS/Minerva/Elect/CRIM.pdf

CROC: Fused for 3A@5V.
http://www-ppd.fnal.gov/EEDOffice-w/Projects/CMS/Minerva/Elect/CROC.pdf

FEB: Fused for 2A@4V
http://www-ppd.fnal.gov/EEDOffice-w/Projects/CMS/Minerva/Elect/FEB.pdf

FESB: 48V fused@2A, 4V fused @2A
http://www-ppd.fnal.gov/EEDOffice-w/Projects/CMS/Minerva/Elect/Power_Dist.pdf

4 AC Power Distribution

Figure 3 illustrates the AC Power Distribution for the Minerva Mtest experiment. Power cords for all equipment are 120V/18AWG. All devices are powered through the AC Distribution box except the RPS which uses the non-switched output. The UPS in the DAQ rack uses the 20A switched output. Fusing for the electronics cards in the VME crate are listed in the drawing.

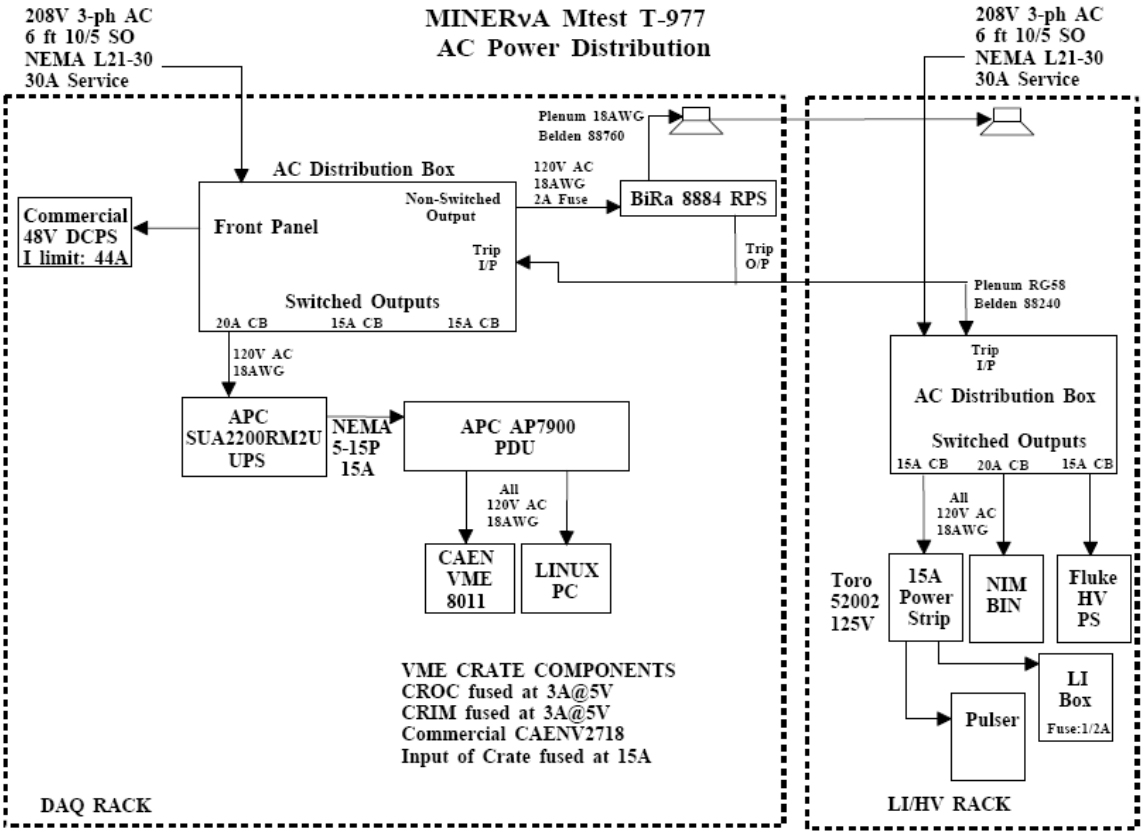

Figure 3: Mtest AC Distribution

5 DC Power

The Mtest apparatus utilizes the Minerva production version of the DC Power Supply Architecture. The documentation detailing this system can be found here http://www-ppd.fnal.gov/EEDOffice-w/Projects/CMS/Minerva/Elect/Power_Dist.pdf

48V/40A power is delivered to the bus bar shown in Figure 4. The Fermilab design guideline of 1000A/in^2 current limit is not exceeded.

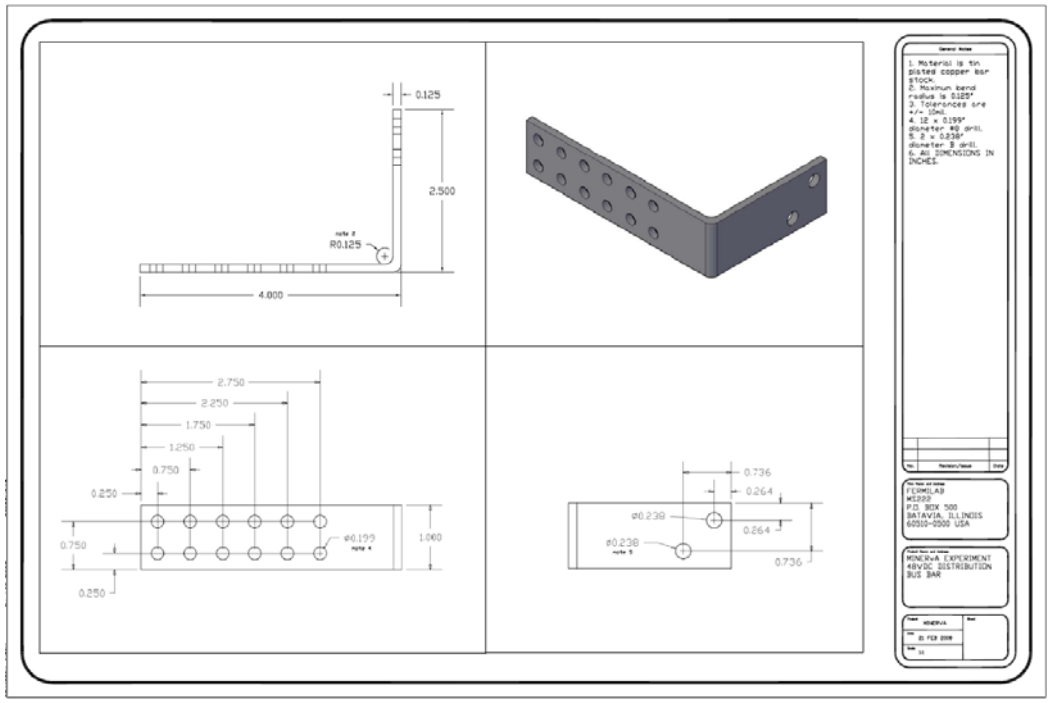

Figure 4: 48V Power Bus Bar

A method for resetting the power going to each FESB has been incorporated into the DC Distribution Chassis. Rather than using a commercial available fuse panel, additional 2A fuses have been added to the DC Distribution Chassis as shown in Figure 5. The front panel of this chassis has switches on each FESB supply for power cycling. Molex connectors are available on the front panel. The Molex pins are rated at 5A (PN02-06-2103).

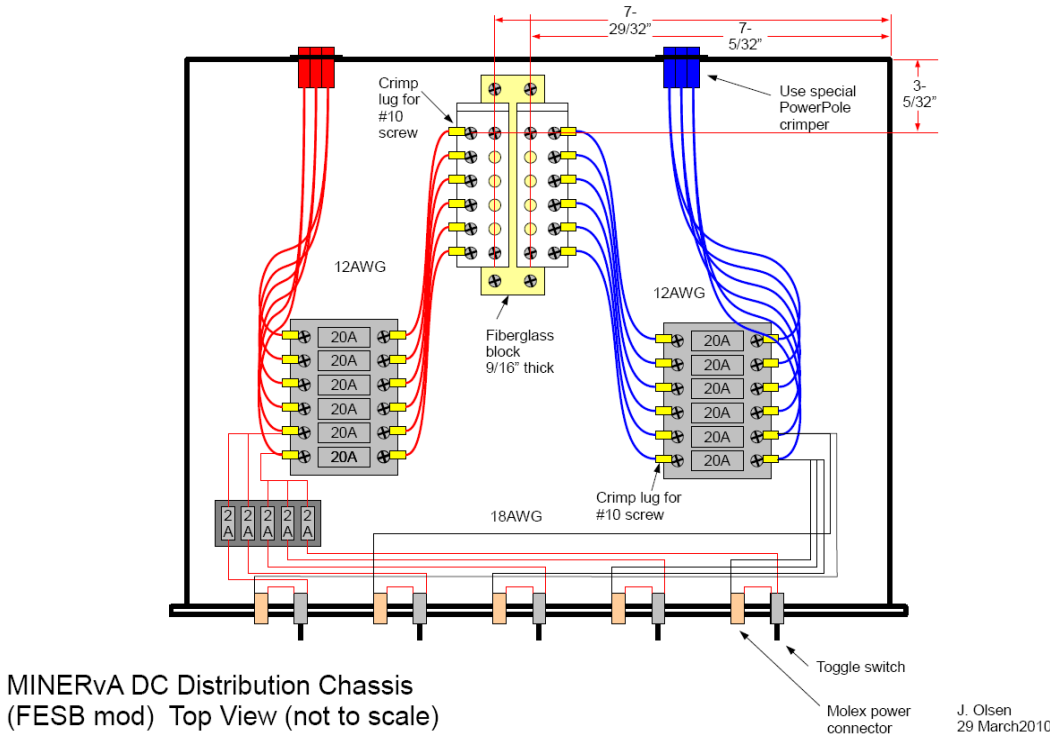

Figure 5: DC Distribution Chassis

Figure 6 shows the schematic for the DC Distribution chassis. 12AWG wire is used from the 48Vsupply to the 20A and 2A fuses. 18AWG is used after the 2A fuses.

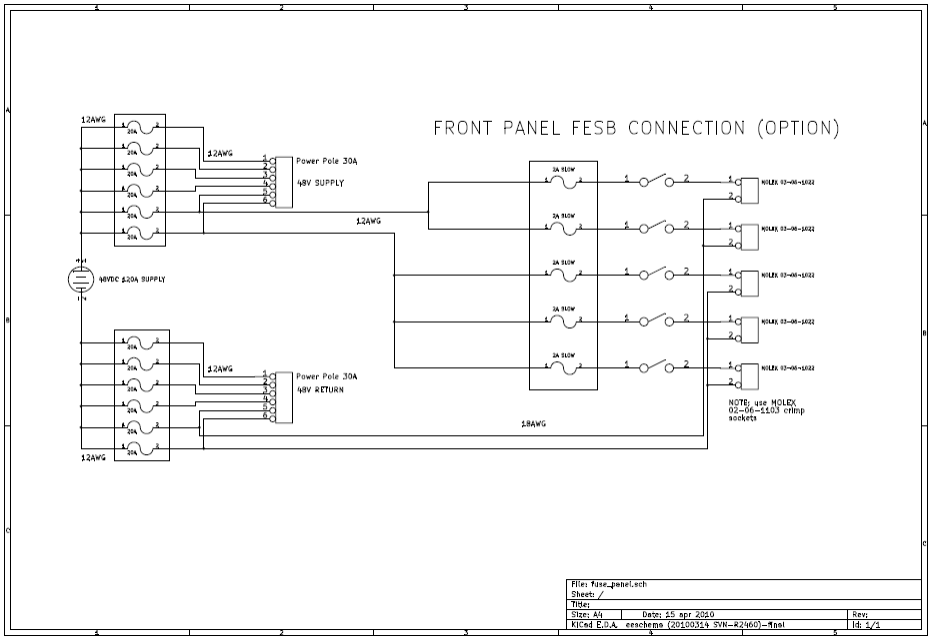

Figure 6: DC Distribution Chassis Schematic (Fuse Panel)

The Cord End calculation and DC wiring diagram is shown in Figure 7. Belden 9409, 18AWG twisted pair cable is used to distribute the DC power from the front panel of the DC Distribution Box. Molex pins and sockets are rated for 5A. Cord Ends are used to terminate the 18AWG twisted pair for use in the compression fit FESB connectors which are rated for 8A. The ampacity calculation shows that the cord ends comply with the 1000A/in^2 safety guideline regardless of the blade orientation inside the compression fit connectors on the FESB. The FESB housing is connected to the enclosure's ground bus bar via a ½" tinned copper woven flat braid (stock number: 1168-011500). The braid is rated for 53A.

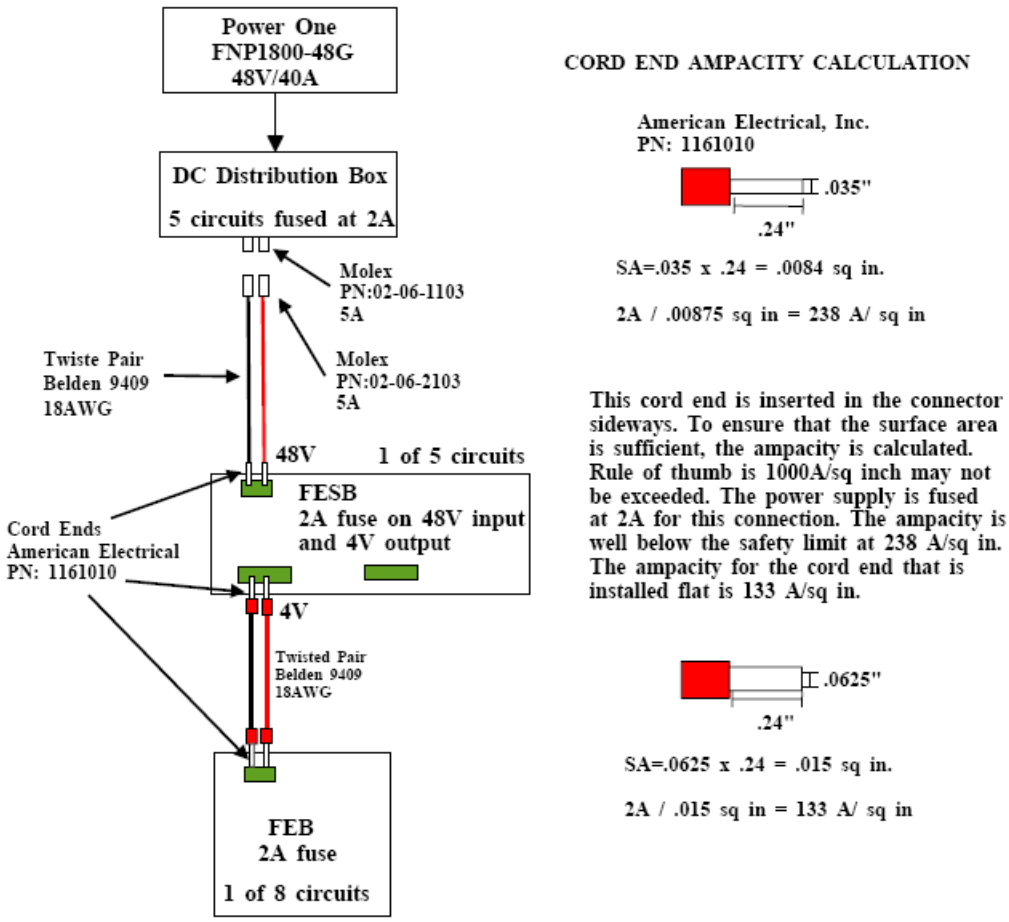

Figure 7: DC Power Distribution

The FESB is described in the following DC distribution document:
http://www-ppd.fnal.gov/EEDOffice-w/Projects/CMS/Minerva/Elect/Power_Dist.pdf

6 Trigger System High Voltage

The Mtest Trigger system consists of 16 scintillating panels attached to PMTs. Eight panels are mounted on each end of the experiment frame. Coincidence logic is applied to the PMT signals, creating the Trigger, with standard NIM electronics.

A commercial Fluke 415B Power Supply (3kVV@30mA) provides power to the photomultiplier tubes. The bulk voltage is stepped down with an ES-7092 Berkeley Zener Regulated Photomultiplier Divider Panel (Brown Cow). Standard red RG58, issued by the Fermilab stockroom, is used for the HV. Green RG58 is used for the signals. HV cable is terminated with SHV. Signal cable is terminated with BNC.

Here are the links to the equipment available from PREP.

NIM Bin Model 1012H
http://www-css.fnal.gov/els/prep/catalog/hardware_info/bl_packer/1012.html

HV Zener Divider ES 7092
http://www-css.fnal.gov/els/prep/catalog/hardware_info/fermilab/rackmount/es7092.html

7 Rack Protection

The DAQ and LI/HV racks are protected by the BiRa 8884 Rack Protection System. Smoke detectors, Model 1412, are linked together such that if one detector senses smoke, both racks will power down through the AC Distribution Box interlock output (Figure 8). The smoke sensors are powered by the RPS with 12V, low current. Belden 88760, 18AWG wire is used to link the smoke sensors.

The specification sheet for the smoke detectors is here
http://www-ppd.fnal.gov/EEDOffice-w/Projects/CMS/Minerva/VETO_ORC/VETO_Rack/I56-0280.pdf

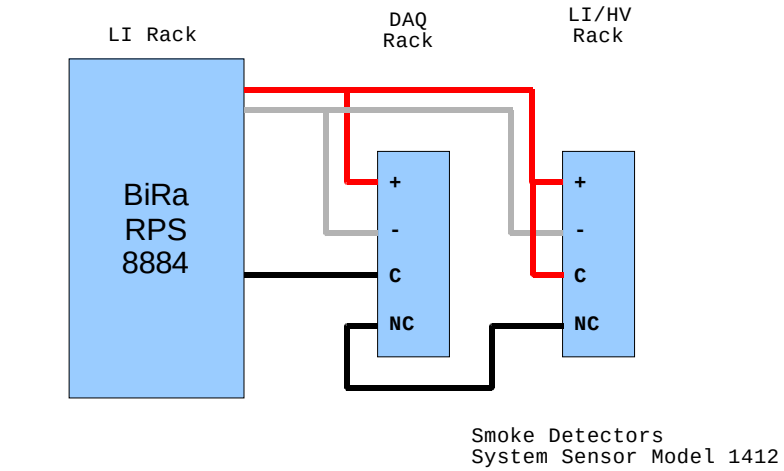

Figure 8: System Sensor Model 1412 Smoke Detector schematic

The battery back-up power from the UPS is disconnected via the Emergency Power Off input on the UPS rear panel. Figure 9 is a drawing showing the EPO circuit. 22 AWG plenum wire is used to make the connection between the RPS and UPS. Since the connector provided from the UPS manufacturer is a compression type termination, cord ends, described in the DC distribution section, were used to terminate the conductors.

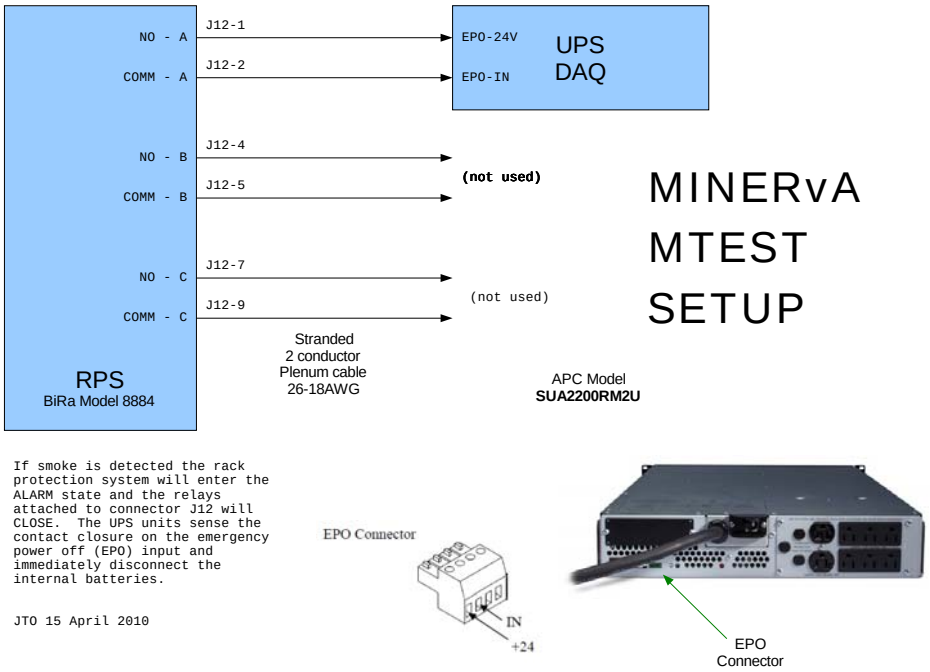

Figure 9: ESO wiring diagram.