MINERνA
VETO Rack
Electrical Documentation

April 29, 2010
Updated March 13, 2012

Contact: Linda Bagby
bagby@fnal.gov
x3100

Location: MINOS Near Detector Hall

The MINERνA experiment is located in the MINOS Underground Hall. Part of the Minerva experiment includes a Veto system composed of scintillating fiber panels, a HV system, and various commercially available electronics. We request pORC approval for unattended operation of the updated HV system recently installed to replace the failing LeCroy HV4032. The equipment installed includes a Bira HV Power Supply crate, model 4877PS, Lambda power supply assembly model 25156-2, and two fan trays.

Contents

1 Introduction 3
2 Veto Rack Layout 3
3 FEB Chassis 4
4 DC Low Voltage Distribution 4
4.1 FEB Chassis 4
4.2 Bira HV crate 5
5 DC High Voltage Distribution 7
6 AC Distribution 7
7 Rack Protection 8

MINERνA VETO System

1 Introduction

The Minerva experiment (E938) Veto System consist of two Veto walls, each consisting of fourteen 2.5’ x 10’ scintillator panels mounted upstream from the Helium Target in the MINOS experimental hall. Each scintillator panel is attached to two PMTs. The PMTs are either Thorn model 9954 or Hamatsu model R5686/R329. The Bira HV system, model 4877PS, provides high voltage bias to the PMTs via SHV terminated FT6, plenum rated, RG58 cable. The PMTs are readout using a custom designed Front End Board (FEB) chassis. All components in the FEB Chassis have previously received ORC clearance.

2 Veto Rack Layout

The Veto electronics rack, shown in Figure 1, contains commercially available equipment consisting of a AP7900 Power Distribution Unit (PDU), two SC833T-650B Linux PCs, one SC815TQ-700CB computer, and a SUA2200RM2U (1980W) Uninterruptable Power Supply (UPS).

The AC Distribution Box and FEB chassis are custom designs for the Minerva experiment and have received prior ORC approval.

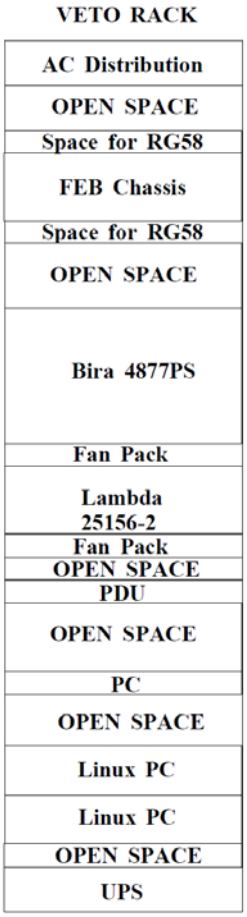

Figure 1: VETO Rack

3 FEB Chassis

The FEB Chassis is constructed of production Minerva components which includes two Minerva Front End Boards (FEB), two Breakout Cards, and a Front End Support Board (FESB). The FEB and FESB have previously been reviewed. The Breakout Card schematic can be found here:
http://www-ppd.fnal.gov/EEDOffice-w/Projects/CMS/Minerva/Elect/pmt_input_breakout_1.pdf
A description of the FEB Chassis can be found here:
http://www-ppd.fnal.gov/EEDOffice-w/Projects/CMS/Minerva/Elect/FEB_Eng_Note.pdf

4 DC Low Voltage Distribution

4.1 FEB Chassis

Figure 2 illustrates the DC Voltage Distribution for the FEB Chassis. 48V is brought from the Minerva Production Fuse Panel to the FEB Chassis with a RG108, 20 AWG cable. The cable has been flame tested by Jim Priest and found adequate for underground installations. 20AWG conductors are capable of handling 8amps of current. The Molex connector pins at the fuse panel are rated for 5A. The chassis is connected to the Veto rack via ¼" wide tinned plated copper braid.

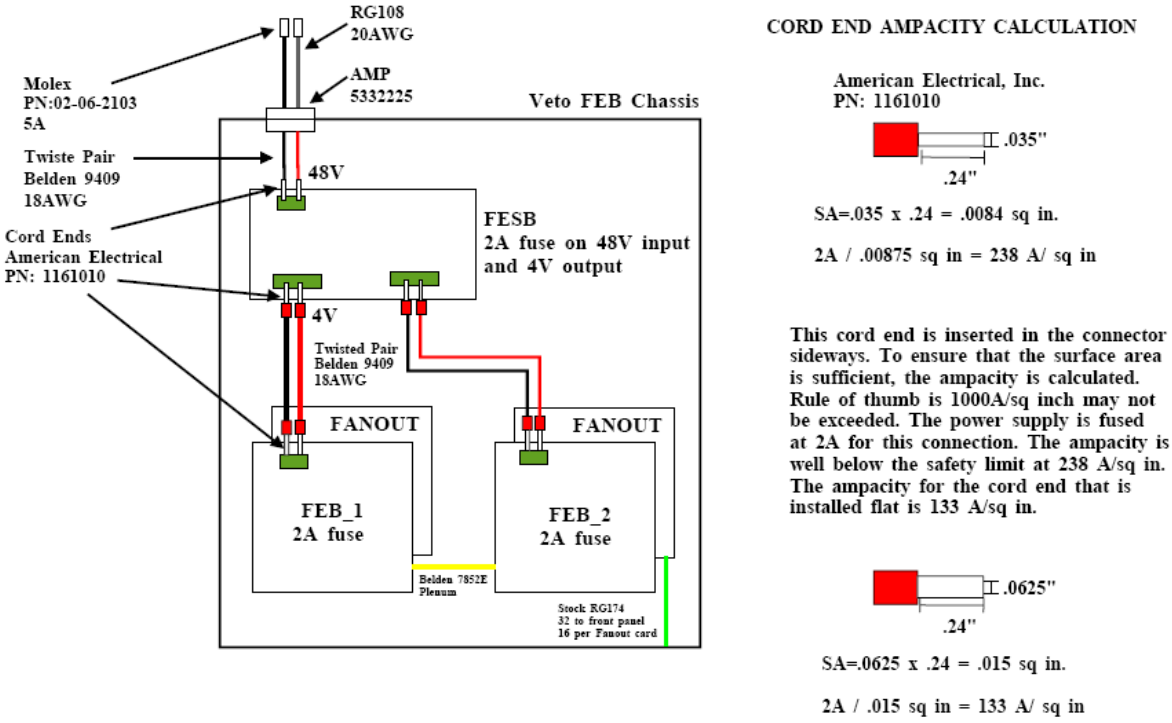

Figure 2: Veto FEB Chassis DC Distribution Chassis

The AMP 5332225 connector is specifically made for use with RG108. Standard polarity protocol was followed as shown in Figure 3. The socket on the FEB Chassis cable end is +48V while the pin is the return.

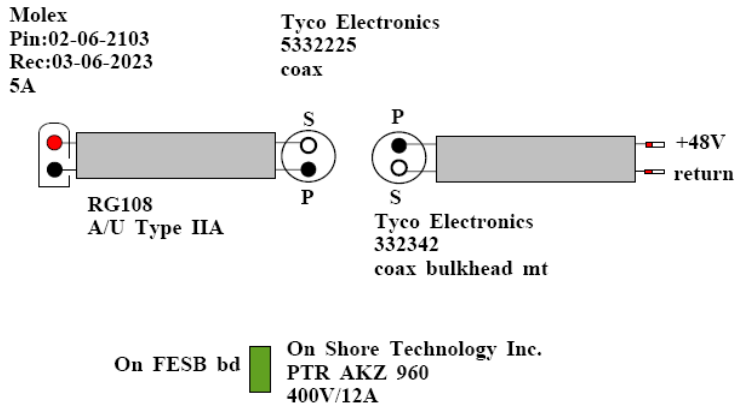

Figure 3: RG108 termination convention.

4.2 Bira HV crate

The LAMBDA power supply assembly # 25156-2 and wiring harness are shown in Figure 4. The commercially available LAMBDA power supply assembly provides DC power to the VME HV crate backplane via a wiring harness which is designed to carry the maximum available current from each supply within the assembly. 10AWG wire is capable of handling 35A and 14 AWG cable is capable of handling 20A. The 14 AWG +5V sense lines are fused at 10A with in-line fuses. The power returns for all modules are tied to the chassis ground within the LAMBDA mainframe.

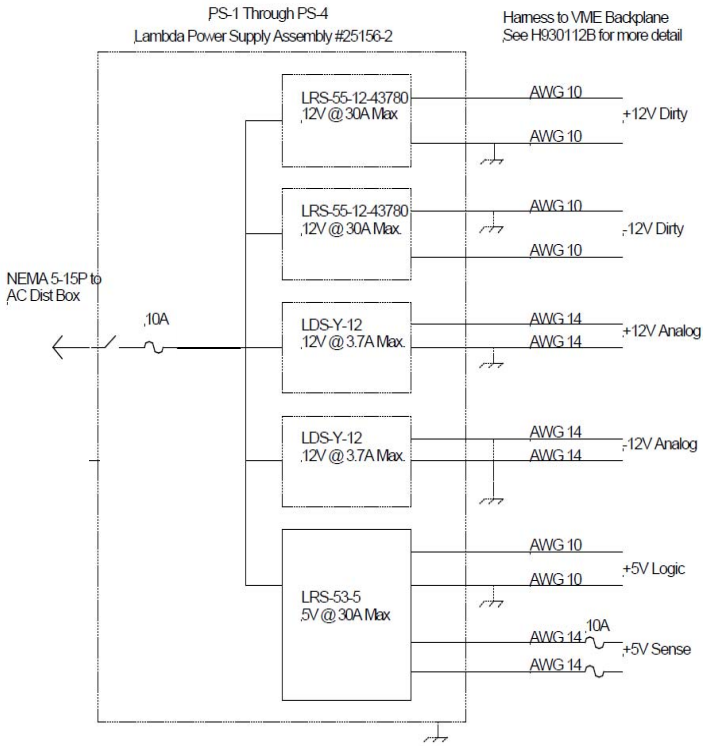

Figure 4: LAMBDA Assembly and wiring harness

Figure 5 illustrates the fuse value and pin designations for the power rails located on the Mother Board which holds the HV pods. +5V and +/-12V bulk are fused with 5A pico fuses. +/-12V Analog is fused with 2A pico fuses. Figure 6 is a picture of the +12V Analog 2A fuses.

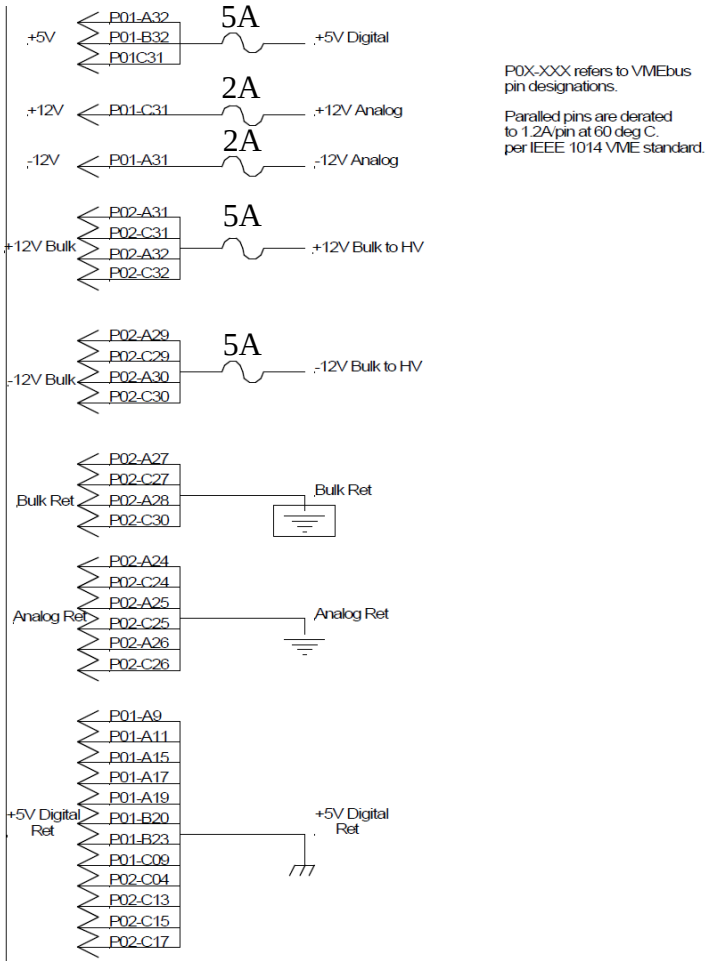

Figure 5: Mother Board Fusing

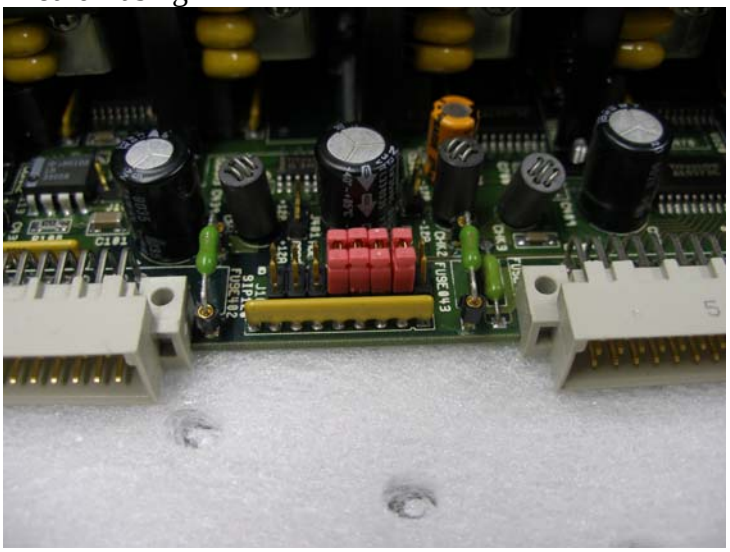

Figure 6: 2A +12VAnalog pico fuses.

5 DC High Voltage Distribution

The mother boards in the high voltage crate contain T11 type (-3.3kV/3mA) pods. Each mother board contains 8 pods. There are four mother boards in the crate for a total of 32 channels. SHV terminated RG58, Belden 82240, white, plenum rated FT6 is used to connect the high voltage to the PMT tubes. The high voltage pods are adjusted for a voltage trip point of -2.5kV via the front panel potentiometer.

6 AC Distribution

The AC distribution line drawing is shown in Figure 7. The 20A circuit from the AC Distribution Box has been previously reviewed. The equipment under review with this request includes the two 15A services. All power cords are 18AWG.

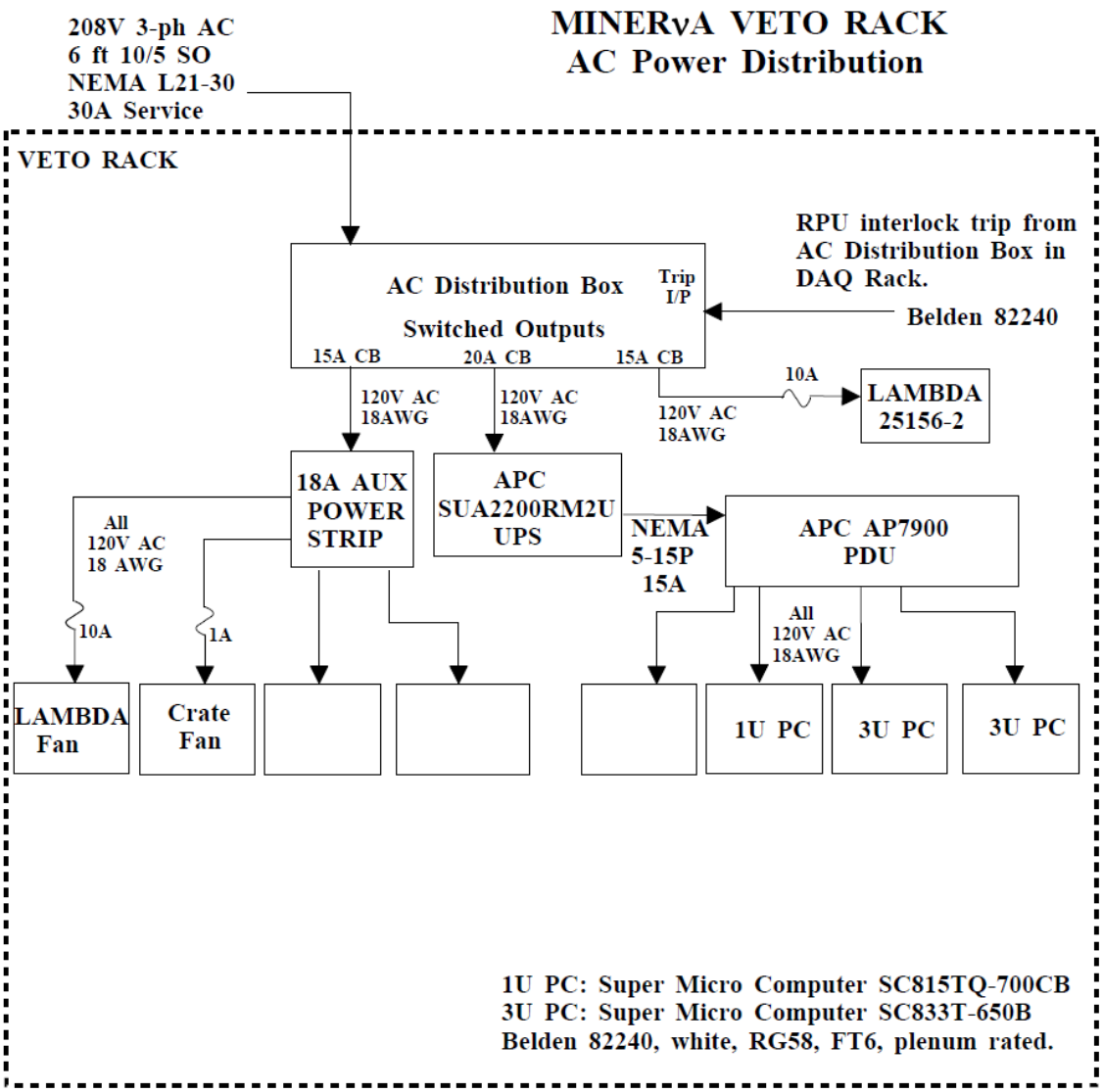

Figure 7: VETO Rack AC Distribution

7 Rack Protection

The Veto Rack is part of the rack protection system in all other Minerva electronics racks. Figure 8 is the schematic for the smoke detection circuit. Cables used in this system are plenum, FT6 grade (Belden 88240). Each smoke detector has been tested for proper operation as well as the Emergency Power Off circuit to the UPS units. The specifications for the 1412 smoke detector used throughout the system are here http://www-ppd.fnal.gov/EEDOffice-w/Projects/CMS/Minerva/VETO_ORC/VETO_Rack/I56-0280.pdf

The Veto Rack is enclosed with front and side panels and a back door. A grounding braid has been attached from an unpainted surface in the rack to the AC power conduit with a bronze grounding clamp.

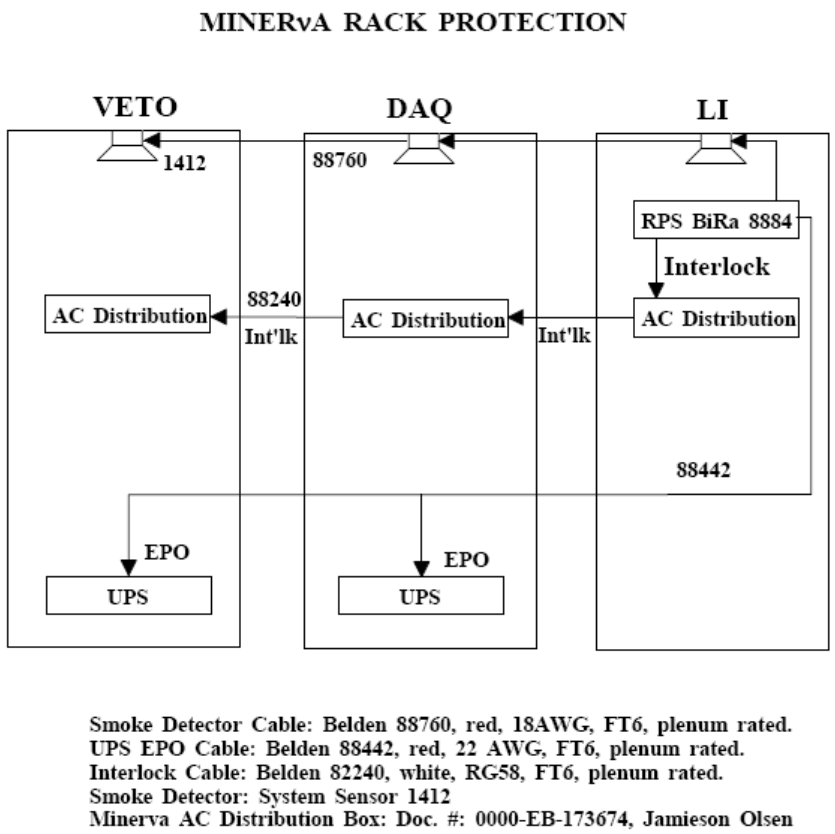

Figure 8: Rack Protection Block Diagram

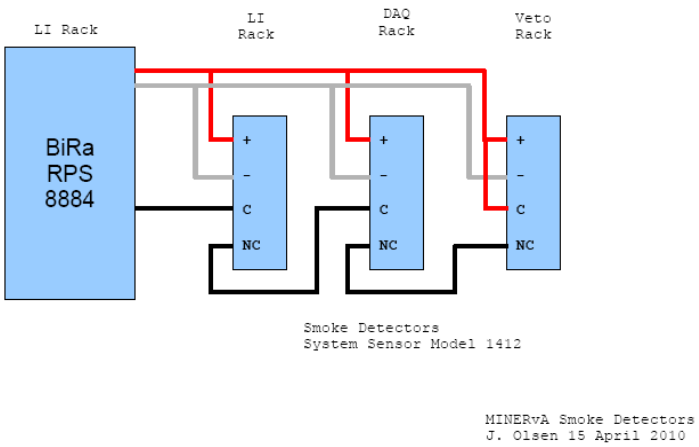

Figure 8a: Smoke Detector Schematic

The Emergency UPS Power Off circuit is shown in Figure 9. Belden 88442, 22 AWG, FT6, cable is used to make the connection from the RPS to the UPS. This is a SELV (Safety Extra Low Voltage) circuit. If the RPS senses smoke, the EPO function immediately disconnects the batteries from the load.

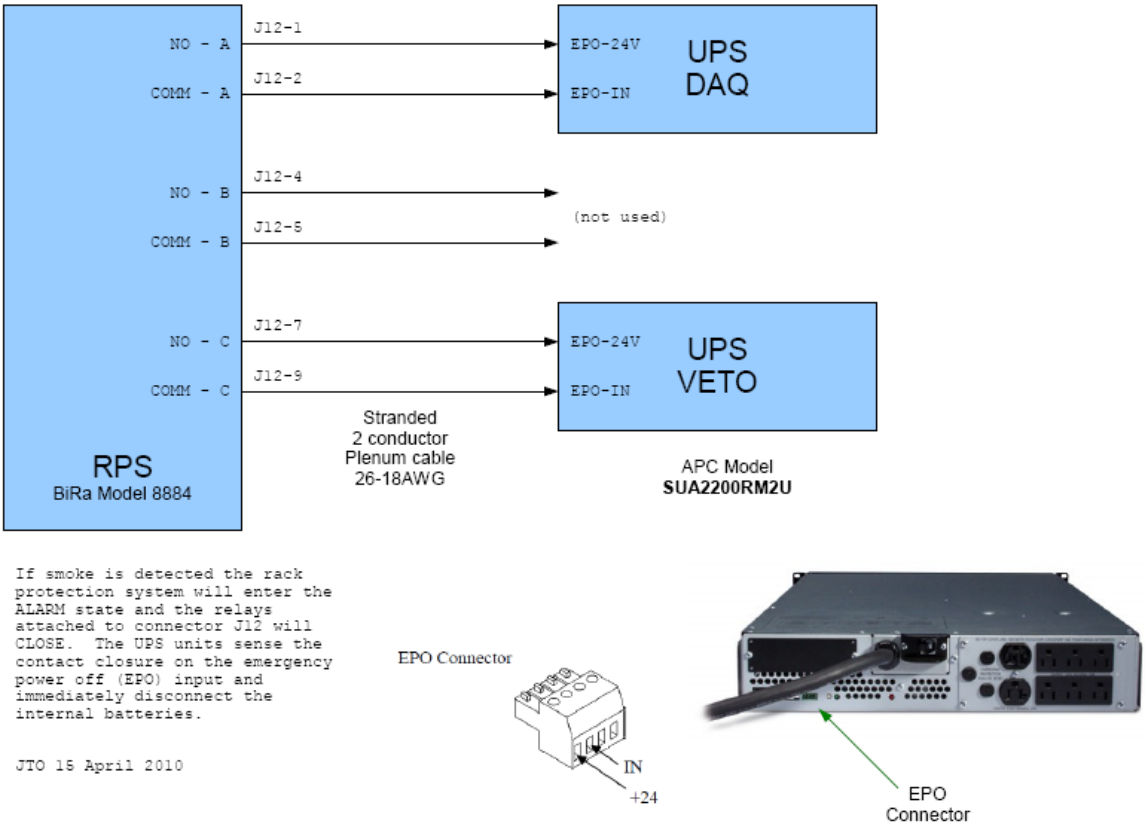

Figure 9: Emergency UPS Shut Off Circuit