| REV | DESCRIPTION | DRAWN | DATE |
|---|---|---|---|
| | | APPROVED | DATE |

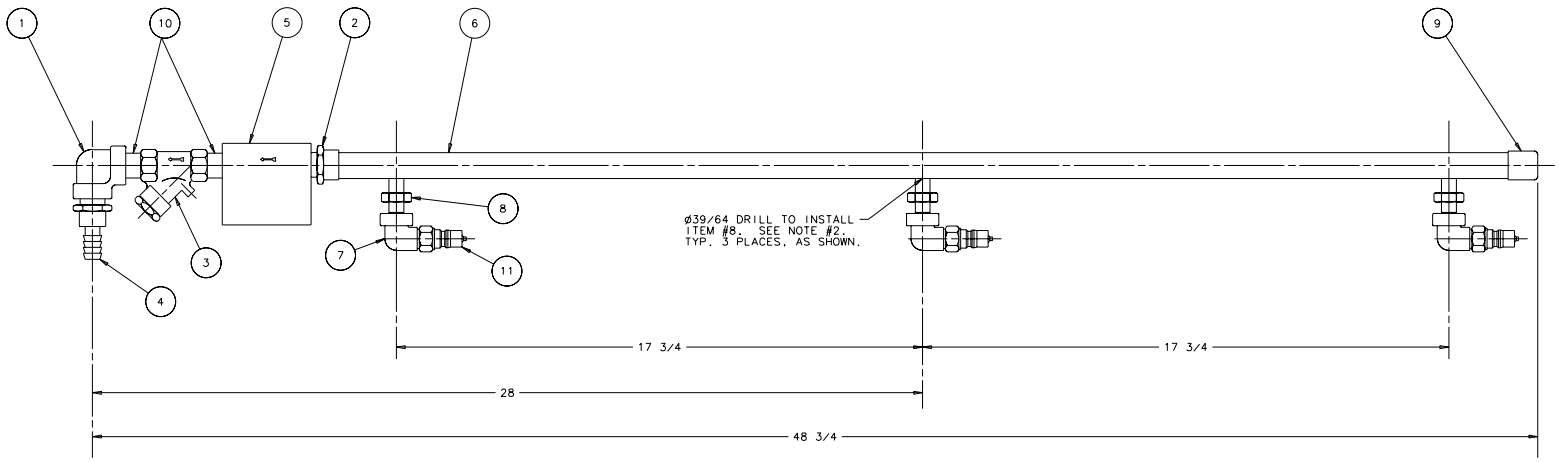


| ITEM | PART NO. | DESCRIPTION OR SIZE | QTY. |
|---|---|---|---|
| 11 | 1018-0105 | COUPLING, QUICK-DISCONNECT,BRASS, BODY-FEMALE CONNECTION, DOUBLE SHUT OFF 1/4 BODY X 1/4 FPT | 3 |
| 10 | 1020-0750 | NIPPLE, PIPE, BRASS, 1/2 MPT X 4" CLOSE | 2 |
| 9 | 1025-0530 | CAP, COPPER, MUELLER STYLE WC-415 3/4 | 1 |
| 8 | 1025-0215 | ADAPTER, COPPER, COP TO MPT MUELLER STYLE WC-401 3/8 X 1/4 | 3 |
| 7 | 1020-0575 | ELBOW, STREET, 90°, 1/4 FPT X 1/4 MPT | 3 |
| 6 | 1081-0070 | PIPE, COPPER, TYPE K, 3/4" NOM. DIA. X .065 WALL, (7/8" O.D.) | AS REQ'D. |
| 5 | | FLOWMETER, PROTEUS IND. MODEL #150BTF2 OR EQUIVALENT | 1 |
| 4 | 1017-0135 | BARB, HOSE, BRASS, PUSH-LOK, PARKER-HANNIFIN P/N 30182-8-8B, 1/2 HOSE X 1/2-14 MPT | 1 |
| 3 | | CHECK VALVE, 1/2 FPT X 1/2 FPT ASCO #V0123 OR EQUIVALENT | 1 |
| 2 | 1025-0250 | ADAPTER, Cu, SIZE 3/4C X 1/2 MPT MUELLER WC-401 OR EQUIVALENT | 1 |
| 1 | 1020-0460 | ELBOW, 90°, BRASS, 1/2" FPT | 1 |

PARTS LIST

| UNLESS OTHERWISE SPECIFIED | | | ORIGINATOR | R.HANCE | 03-APR-2002 |
|---|---|---|---|---|---|
| FRACTIONS | DECIMALS | ANGLES | DRAWN | J.MATESKI | 03-APR-2002 |
| ± 1/8 | ± XX | ± 1° | CHECKED | E.ARKO | 03-APR-2002 |
| | | | APPROVED | | |

1. BREAK ALL SHARP EDGES .015 MAX.
2. DO NOT SCALE DRAWING.
3. DIMENSIONS BASED UPON ANSI Y14.5M-1982
4. ALL DIMENSIONS ARE INCHES
5. MAX. ALL MACH. SURFACES 125

USED ON

MATERIAL: SEE PARTS LIST ABOVE

**FERMI NATIONAL ACCELERATOR LABORATORY**
UNITED STATES DEPARTMENT OF ENERGY

D-ZERO DETECTOR UPGRADE
MCH-FADC ELECTRONICS RACK
WATER MANIFOLD ASS'Y. - RETURN

| SCALE | DRAWING NUMBER | SHEET | REV |
|---|---|---|---|
| 1/2 | 3823.000-MD-399434 | 1 OF 1 | |

CREATED WITH : Ideas8m4 GROUP: PPD/MECHANICAL DEPARTMENT

NOTE:

1. THIS DRAWING REPLACES DRAWING #3740.411-MC-224743, AND IS UPDATED WITH NEW PARTS.
2. ALL APPLICABLE JOINTS ARE TO BE SOFT SOLDERED EXCEPT ITEMS #8 ARE TO BE SILVER BRAZED TO ITEM #6.
3. FLOWMETER VENDOR (ITEM #5) CAN BE FOUND ON THE WEB AT WWW.PROTEUSIND.COM.

Plotted by mateski on 03-Apr-02 , File: D0_UPGRADE_MECH_mch_fadc_manifold_returnV