Linda Bagby

Engineering Note

Date: 10.24.2012
Rev Date:

Project: MicroBooNE D0DAQ Test Stand ORC
Doc. No: B102412_Bagby_D0DAQ_TS

Subject: MicroBooNE D0DAQ Test Stand-DAQ Rack ORC Request
Team members: D. Huffman, L. Bagby, E. Church.

Introduction:

The MicroBooNE collaboration has constructed an electronics test stand in room 313 of the D0 Assembly Building (DAB). This room is located next to the Hurricane Deck meeting room on the third floor of the building. The test stand consists of three electronics racks; DAQ, Readout, and Power. The collaboration requests an ORC review of the DAQ rack for unattended operation. The Readout rack and Power rack ORC reviews will be requested at a later time.

Figure 1: DAQ Rack

The DAQ rack contains the following commercially available equipment:

1 4U Opteron 6212 Storage Server (uboonedaq-evb)

1 3U Opteron 6212 Storage Server (uboone-seb-10)

1 2U Opteron Storage Server (uboone-seb-01)

2 Cisko Catalyst 2069G Network switc1 KVM Switches

1 Netgear GS105 IPMI Switch

1 Dell computer

1 WTI NPS-8 Power Distribution Unit (PDU)

1 Pulizzi TPC115-8-CRL AC Distribution Box

1 Fan

The DAQ rack contains the following custom designed electronics:

3 Nevis designed PCIe cards, housed within the 2U Server

1 Fermilab designed Rack Protection System

Nevis PCIe card:

The Nevis PCIe custom designed card has been reviewed by Steve Chappa in Round 1 of the MicroBooNE Engineering Design Review sequence. The review focused on obtaining Production Readiness Clearance as well as a review to determine if the design complies with the Fermilab Engineering Design Standards document. The review results can be found at the following url.

http://www-ppd.fnal.gov/EEDOffice-w/Projects/MicroBoone/EDR/Round_1.html .

One 'Required' modification to the board was cited:

There is no fuse protection for the input power to the PCB. The quote: "-No fuse, use TI PTH12000WAD regulator has current limit protection" is not a sufficient justification. The PCB gets power from a backplane like distribution and therefore individual current protection must be provided. Moreover, the use of a current limiting regulator is only sufficient protection for the load-side of the regulator's output. It does not provide protection for the input side. Also, the input side of the regulator is not a "device specifically designed to provide current protection". Therefore, fuse protection is ***required****. In addition, the value of this fuse needs to be clearly indicated on the PCB be either labeling or by use of a silkscreen. Four edge-card connector segments are used to supply +12 VDC to the PCB with each segment (after being de-rated for multiple-pin power distribution) capable of 1.1 amps. Therefore, the maximum fuse value should be 4.5 – 5 amps, depending on the inrush current at power-up.*

The response to the requirement from Nevis can be found at the following url.

http://www-ppd.fnal.gov/EEDOffice-w/Projects/MicroBoone/EDR/Round_1_responses/MicroBoone_Reply_Nevis.pdf

While the PCIe design is being modified to contain the required fusing, the collaboration would like to operate three of the pre-production cards in the D0DAQ test stand, unattended. Delivery of the fused PCIe card is 6 weeks. To continue with software development remotely, an attempt at using a commercially available PCIe extender card, containing the required fusing, was investigated. Unfortunately, due to the mechanical construction of the server mainframe, this was not a viable option. In order to operate the PCIe cards, unattended, whereby continued progress can be made on the DAQ software, another solution was discussed with Steve. It was decided that installing a Rack Protection System in the rack with the smoke sensor positioned directly above the PCIe cards would suffice until the fused cards arrive.

Rack Protection System and AC Distribution:

The Rack Protection System (RPS) consists of three components; the RPS chassis, a System Sensor 2W-B smoke detector, and a Pulizzi TPC115-8-CRL AC Distribution Box. Figure 2 is the block diagram of the AC Distribution System and Rack Protection System.

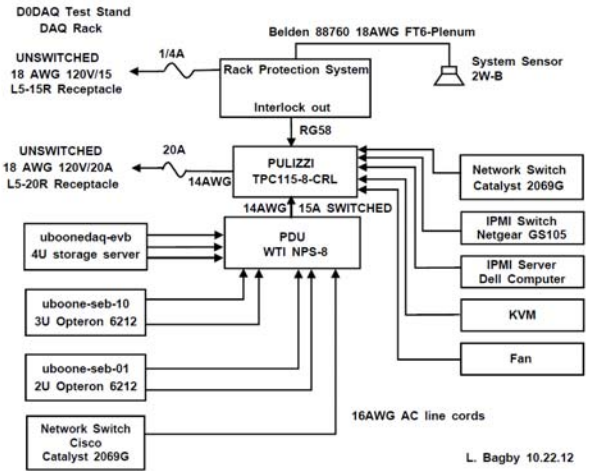

Figure 2: Rack Protection and AC Distribution

The RPS has an Interlock output which is connected to the Pulizzi AC Distribution Box. When smoke is detected, the interlock signal opens a relay whereby power is removed from all rack equipment. The RPS and Pulizzi are powered by unswitched outlets. The RPS design documentation can be found at the following url. http://www-ppd.fnal.gov/EEDOffice-w/Infrastructure_group/Huffman/Web/uboone/default.html

Specifications for the System Sensor can be found here: http://www.systemsensor.com/pdf/A05-0318.pdf

Pulizzi Box specifications are here: http://www.hmcragg.com/epdu-part-details.html?PartNumber=TPC115-8-CRL&id=2731