THIS DRAWING IS UNPUBLISHED. RELEASED FOR PUBLICATION -,- .
© COPYRIGHT - BY TYCO ELECTRONICS CORPORATION. ALL RIGHTS RESERVED.

LOC	DIST
GP	00

REVISIONS

P	LTR	DESCRIPTION	DATE	DWN	APVD
	S	ADDED 9--0 PER EC 0S12-0217-03	12MAY03	AWF	AWF

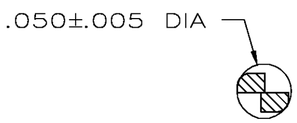

SECTION A-A
SCALE 10:1
10 PLACES

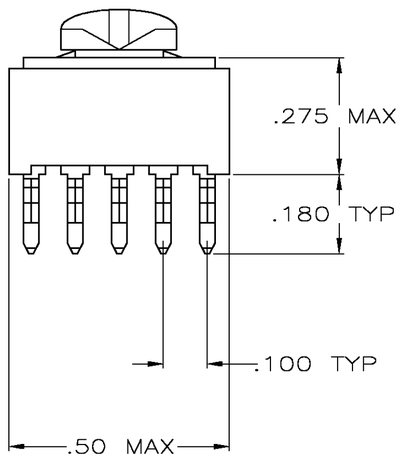

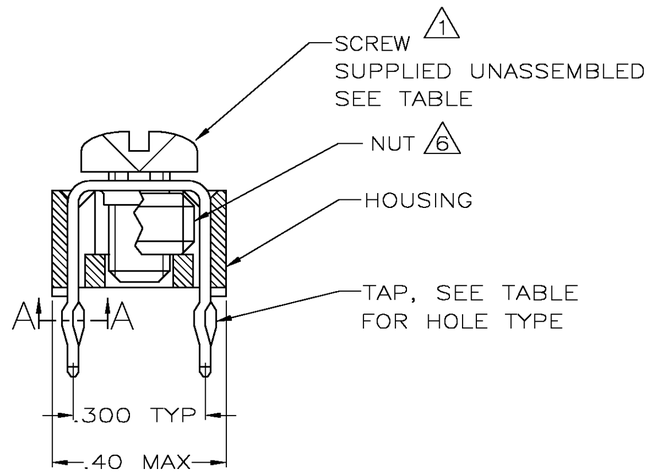

1. TO PREVENT THREAD STRIPPING, SCREW TORQUE SHOULD NOT EXCEED 9 IN LBS.
2. TAP HOLE IS 6-32UNC-2B, TWO MIN THREADS.
3. TAP HOLE IS M4 X 0.7, TWO MIN THREADS.
4. PACKAGED BULK.
5. PACKAGED INDIVIDUALLY.
6. NUT INCREASES TORQUE VALUE TO 26 IN LBS.
7. HOUSING: NYLON UL 94V-0. TAP: COPPER ALLOY 735, .025 THICK.
8. TAP: .000150 TIN-LEAD OVER .000050 NICKEL.
9. CLEARANCE HOLE FOR A 6-32 SCREW.
10. TAP: .000150 TIN OVER .000050 NICKEL.

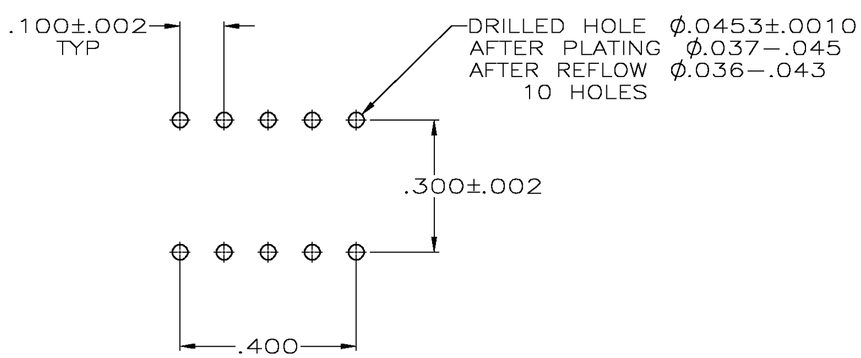

PC BOARD PATTERN

	PACKAGE	FINISH	HOLE TYPE	HOUSING COLOR	HOUSING AND TAP ASSEMBLED	SCREW	PART NO.
	4	10	2	BLACK	YES	993879-1	9-55556-0
	4	8	9	BLACK	6 YES (W/NUT)	NO	1-55556-3
	4	8	9	BLACK	6 YES (W/NUT)	993879-1	1-55556-2
OBSOLETE	5	8	2	BLACK	YES	993879-1	1-55556-1
SUPSD BY -9	-	8	3	BLACK	YES	NO	1-55556-0
	4	8	3	BLACK	YES	M4 X 0.7 X 6MM	55556-9
SUPSD BY -4	-	8	2	WHITE	YES	993879-1	55556-8
SUPSD BY -4	-	8	2	GREEN	YES	993879-1	55556-7
SUPSD BY -4	-	8	2	BLUE	YES	993879-1	55556-6
SUPSD BY -4	-	8	2	RED	YES	993879-1	55556-5
	4	8	2	BLACK	YES	993879-1	55556-4
	4	8	2	BLACK	YES	NO	55556-3
OBSOLETE	-	8	2	BLACK	NO	993879-1	55556-2
	-	8	2	BLACK	NO	NO	55556-1

THIS DRAWING IS A CONTROLLED DOCUMENT.

DIMENSIONS: INCHES

TOLERANCES UNLESS OTHERWISE SPECIFIED:
0 PLC ± -
1 PLC ± -
2 PLC ± -
3 PLC ± .010
4 PLC ± -
ANGLES ± -

MATERIAL 7
FINISH

DWN J.McCLINTON 1-11-88
CHK R.STONE 1-11-88
APVD M.GALLOWAY 1-11-88
PRODUCT SPEC 108-11030
APPLICATION SPEC 114-1100
WEIGHT

Tyco Electronics Corporation
Harrisburg, PA, 17105

NAME TAP ASSEMBLY, POWER DISTRIBUTION

SIZE	CAGE CODE	DRAWING NO	RESTRICTED TO
A2	00779	C-55556	

CUSTOMER DRAWING | SCALE 4:1 | SHEET 1 OF 1 | REV S

55556

AMP 1471-9 REV 31MAR2000

C:\Documents and Settings\us002892\My Documents\Drawings\