REV.	DESCRIPTION	DRAWN / APPD.	DATE / DATE

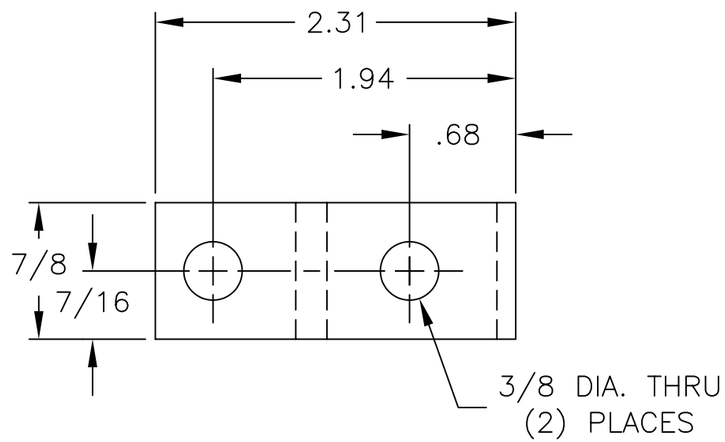

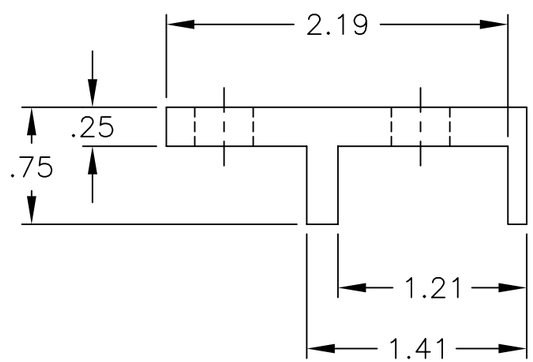

DECIMAL DIMENSIONS: +/−.010
FRACTIONAL DIMENSIONS: +/−.015

MATERIAL: FR−4

ORIGINATOR	B. WILLIAMS	10/4/01	CHECKED		
DRAWN	N. CUNY	10/4/01	APPROVED		

FERMI NATIONAL ACCELERATOR LABORATORY
UNITED STATES DEPARTMENT OF ENERGY

MINOS
5 VOLT POWER SUPPLY INSULATOR

SCALE	SOFTWARE	DRAWING NUMBER	REV.
FULL	AUTOCAD	0000−MB−173457	