REV.	DESCRIPTION	DRAWN / APPD.	DATE / DATE

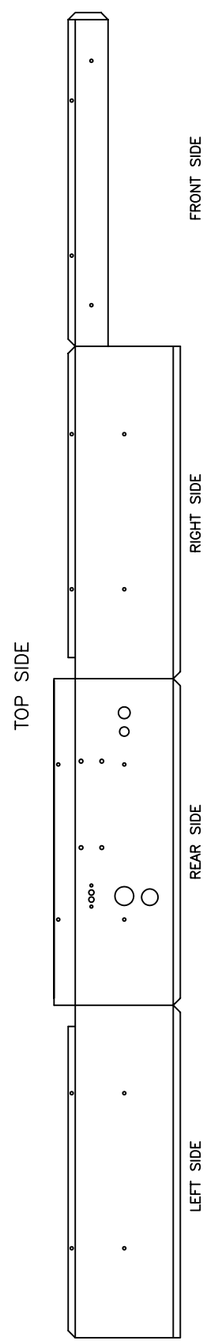

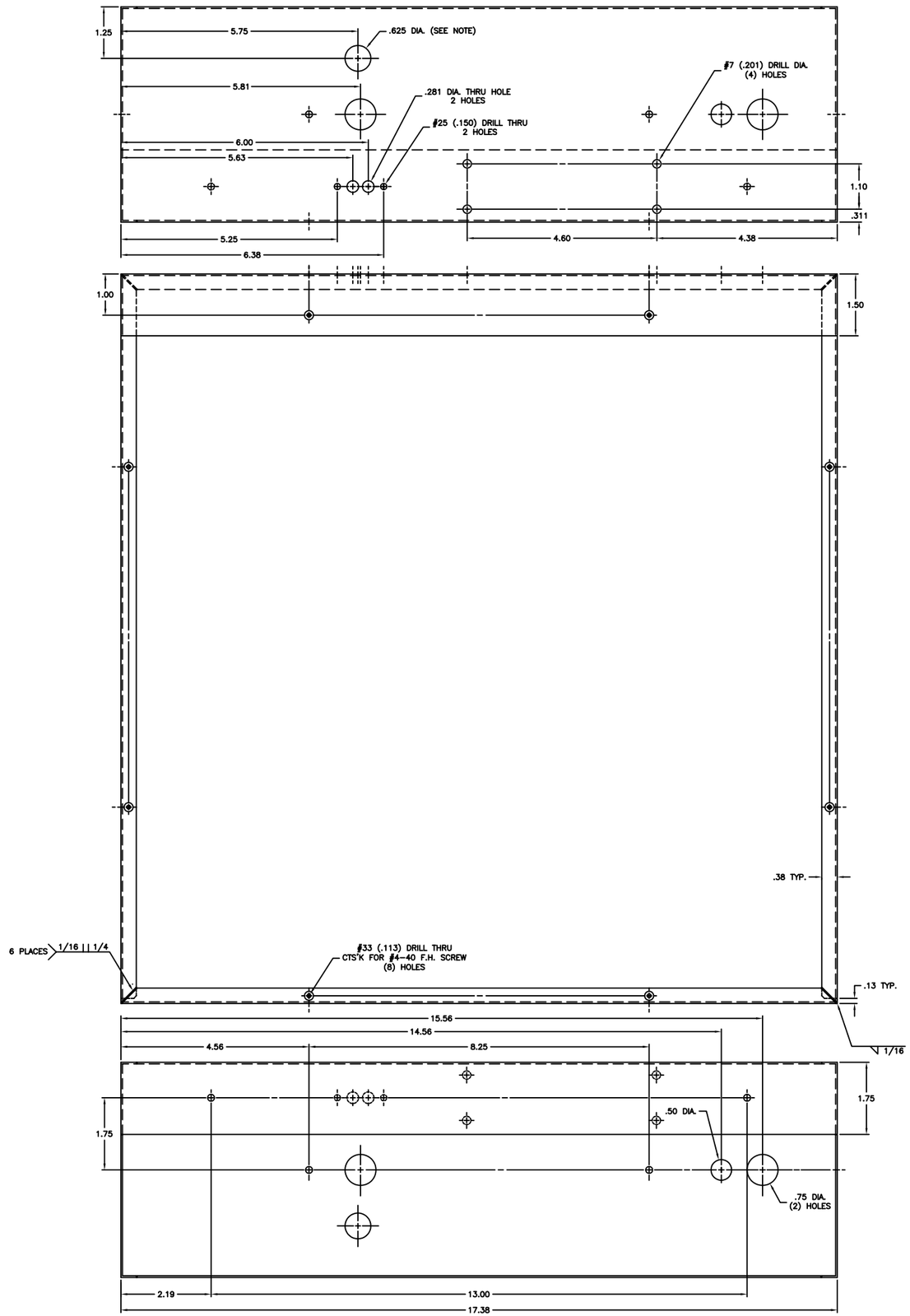

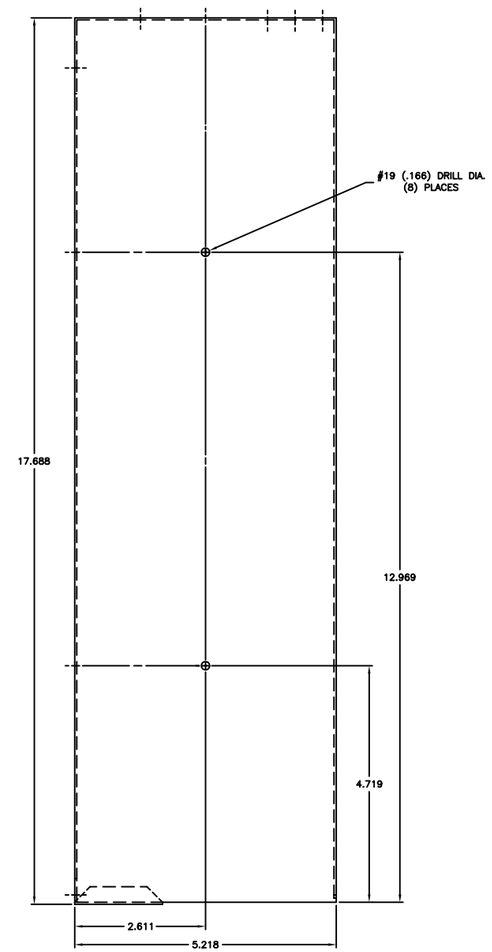

NOTE: QTY. (14) 5/8 DIA. HOLE
QTY. (24) 1/2 DIA. HOLE

MATERIAL: 19 GAGE (.040) STAINLESS STEEL 304
B2 FINISH

ORIGINATOR	B. WILLIAMS	8/18/00	CHECKED	
DRAWN	N. CUNY	8/18/00	APPROVED	

FERMI NATIONAL ACCELERATOR LABORATORY
UNITED STATES DEPARTMENT OF ENERGY

MINOS CRATE COOLING SYSTEM HOUSING

SCALE	SOFTWARE	DRAWING NUMBER	REV.
FULL	AUTOCAD	0000-ME-173460-1	