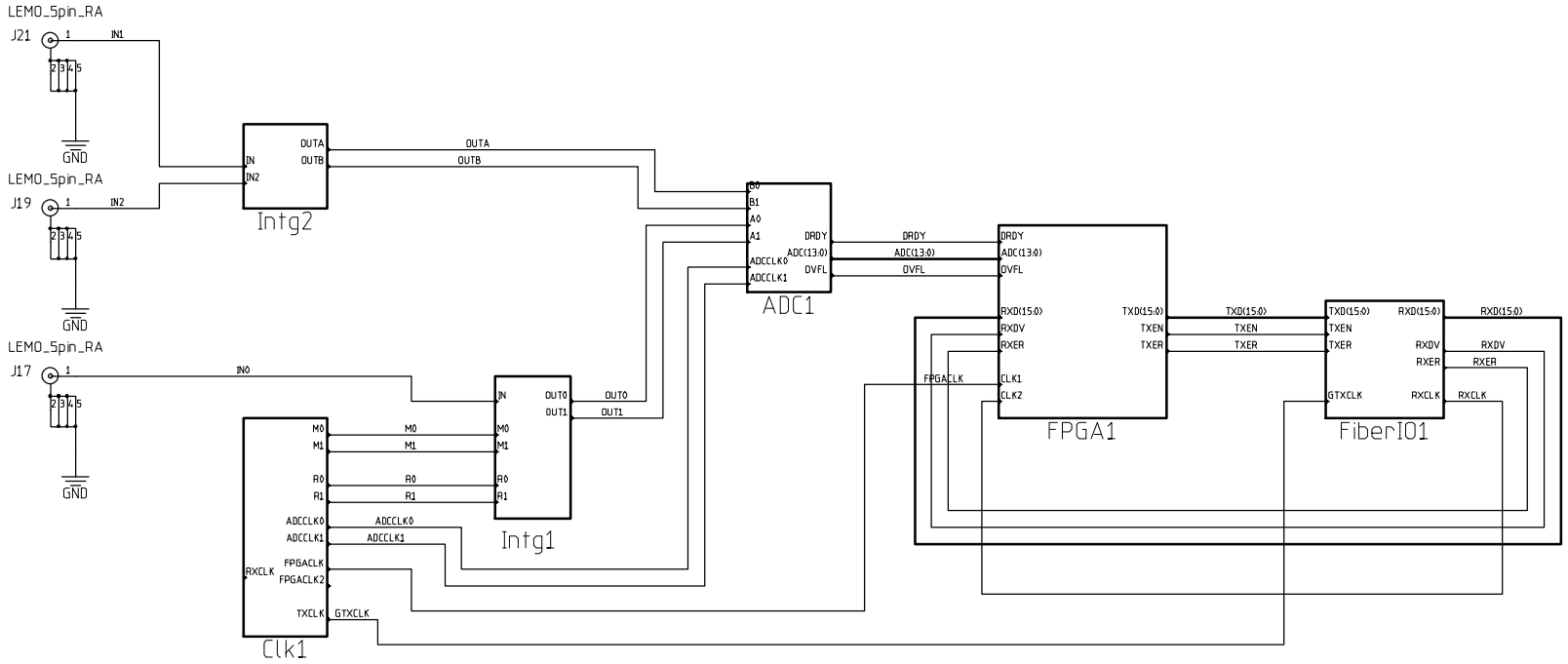

MODFIED 09:17:47 AM 09/06/02				
UNLESS OTHERWISE SPECIFIED			ORIGINATOR	
FRACTIONS	DECIMALS	ANGLES	DRAWN	
			CHECKED	
1. BREAK ALL SHARP EDGES 1/64 MAX.			APPROVED	
2. DO NOT SCALE DWG.			USED ON	
3. DIMENSIONING IN ACCORD WITH ANSI Y14.5 STD's.			MATERIAL	
MAX. ALL MACHINED SURFACES				

Fermi National Accelerator Laboratory
United States Department of Energy

D:\JOBS\comadc\comadc.prj

SIZE	SCALE	FILMED	DRAWING NUMBER	PAGE 02 of 02	REV
C	1:1				

H=4ND; V=4LA

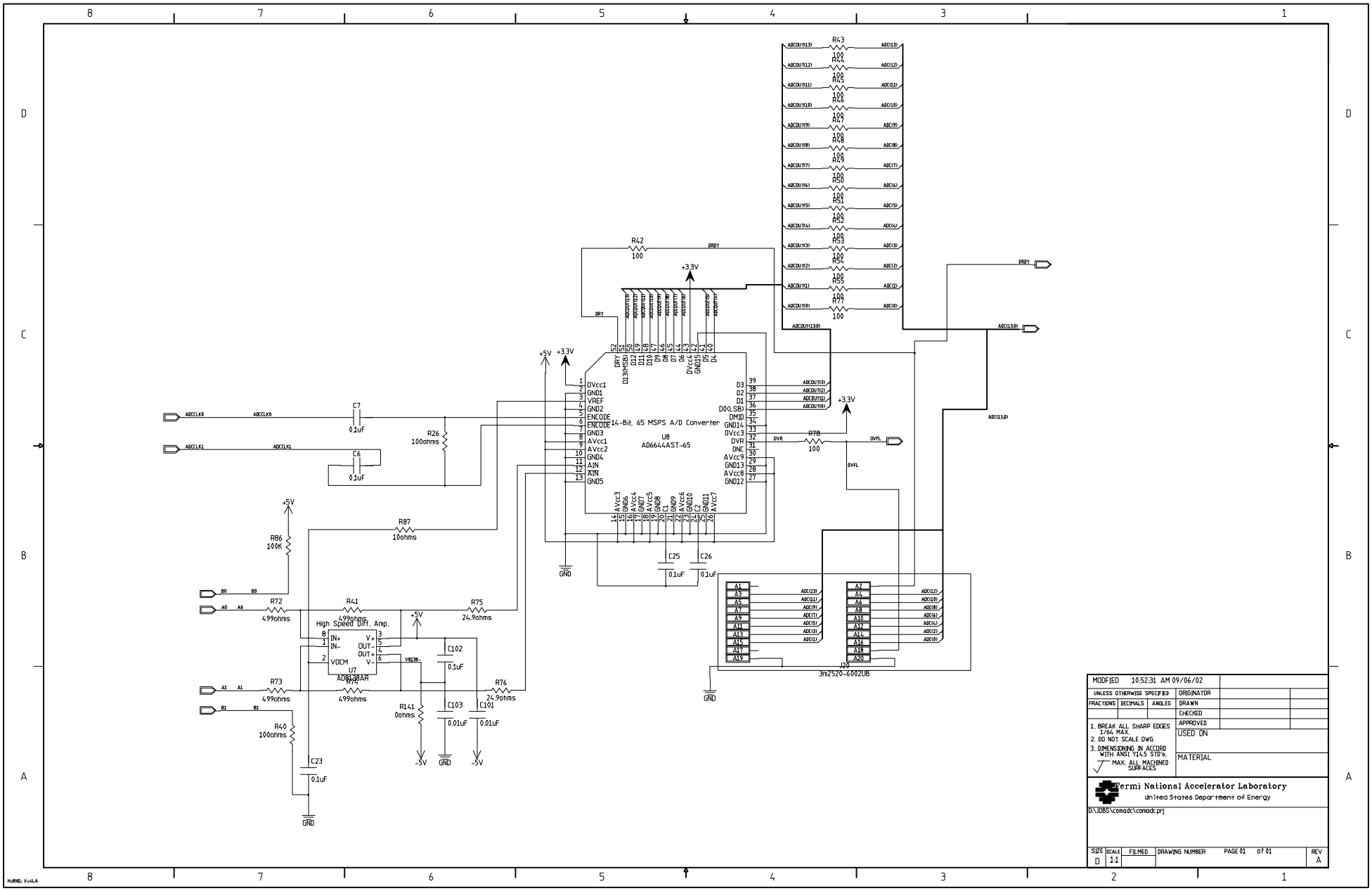
U8
AD6644AST-65
14-Bit, 65 MSPS A/D Converter
High Speed Diff. Amp.
U7
AD8138AR
J20
3M2520-6002UB
MODFIED 10:52:31 AM 09/06/02
UNLESS OTHERWISE SPECIFIED
FRACTIONS DECIMALS ANGLES
1. BREAK ALL SHARP EDGES 1/64 MAX.
2. DO NOT SCALE DWG.
3. DIMENSIONING IN ACCORD WITH ANSI Y14.5 STD'S.
MAX. ALL MACHINED SURFACES
ORIGINATOR
DRAWN
CHECKED
APPROVED
USED ON
MATERIAL
Fermi National Accelerator Laboratory
United States Department of Energy
D:\JOBS\comadc\comadc.prj
SIZE D
SCALE 1:1
FILMED
DRAWING NUMBER
PAGE 01 OF 01
REV A

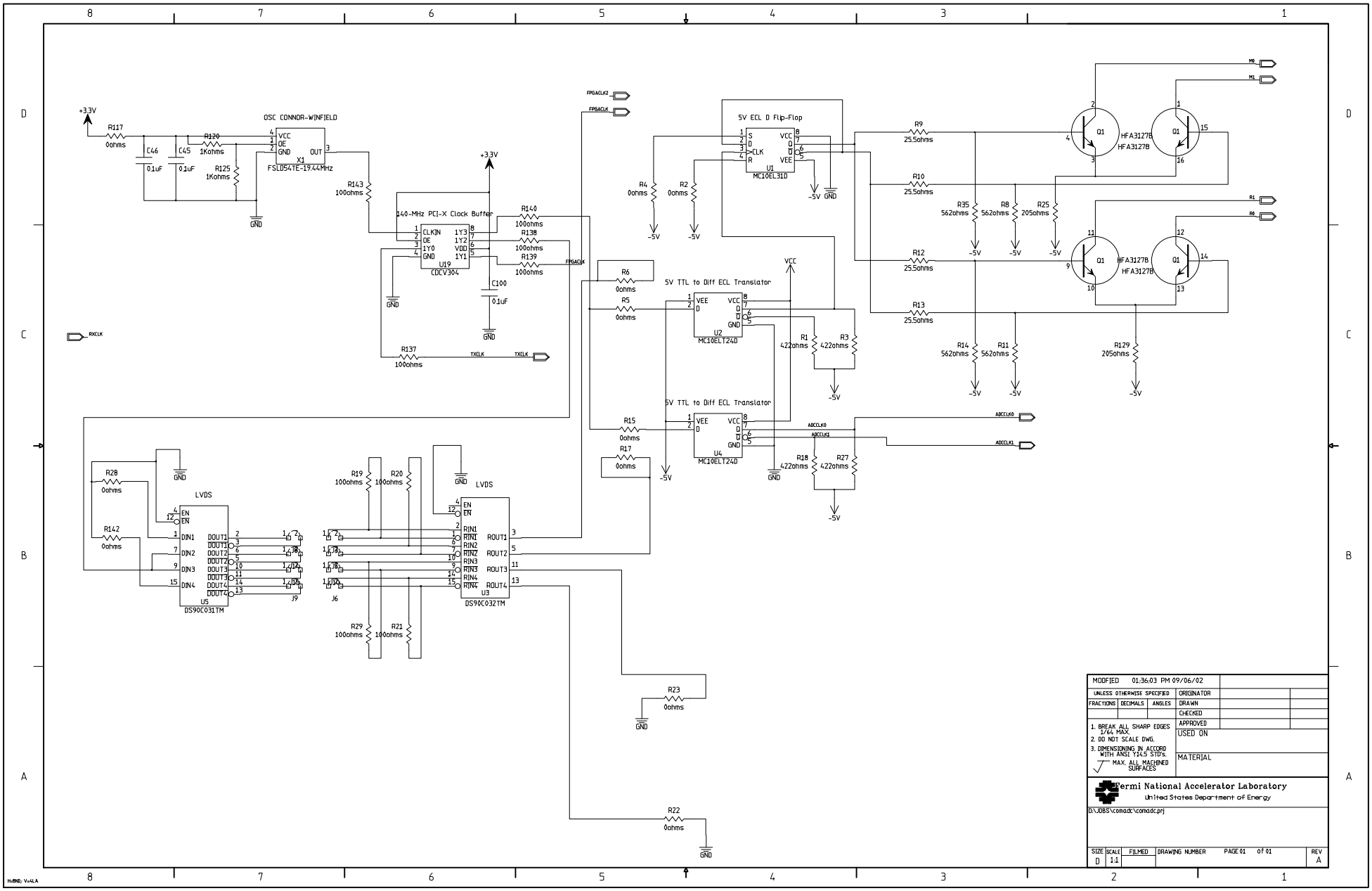

OSC CONNOR-WINFIELD
X1
FSLD54TE-19.44MHz
140-MHz PCI-X Clock Buffer
U19
CDCV304
5V ECL D Flip-Flop
U1
MC10EL31D
5V TTL to Diff ECL Translator
U2
MC10ELT24D
U4
MC10ELT24D
HFA3127B
LVDS
U5
DS90C031TM
U3
DS90C032TM
J9
J6
+3.3V
GND
-5V
VCC
FPGACLK2
FPGACLK
RXCLK
TXCLK
ADCCLK0
ADCCLK1
M0
M1
R1
R0
MODFIED 01:36:03 PM 09/06/02
UNLESS OTHERWISE SPECIFIED
FRACTIONS DECIMALS ANGLES
ORIGINATOR
DRAWN
CHECKED
APPROVED
USED ON
MATERIAL
1. BREAK ALL SHARP EDGES 1/64 MAX.
2. DO NOT SCALE DWG.
3. DIMENSIONING IN ACCORD WITH ANSI Y14.5 STD's.
MAX. ALL MACHINED SURFACES
Fermi National Accelerator Laboratory
United States Department of Energy
D:\JOBS\comadc\comadc.prj
SIZE D
SCALE 1:1
FILMED
DRAWING NUMBER
PAGE 01 of 01
REV A

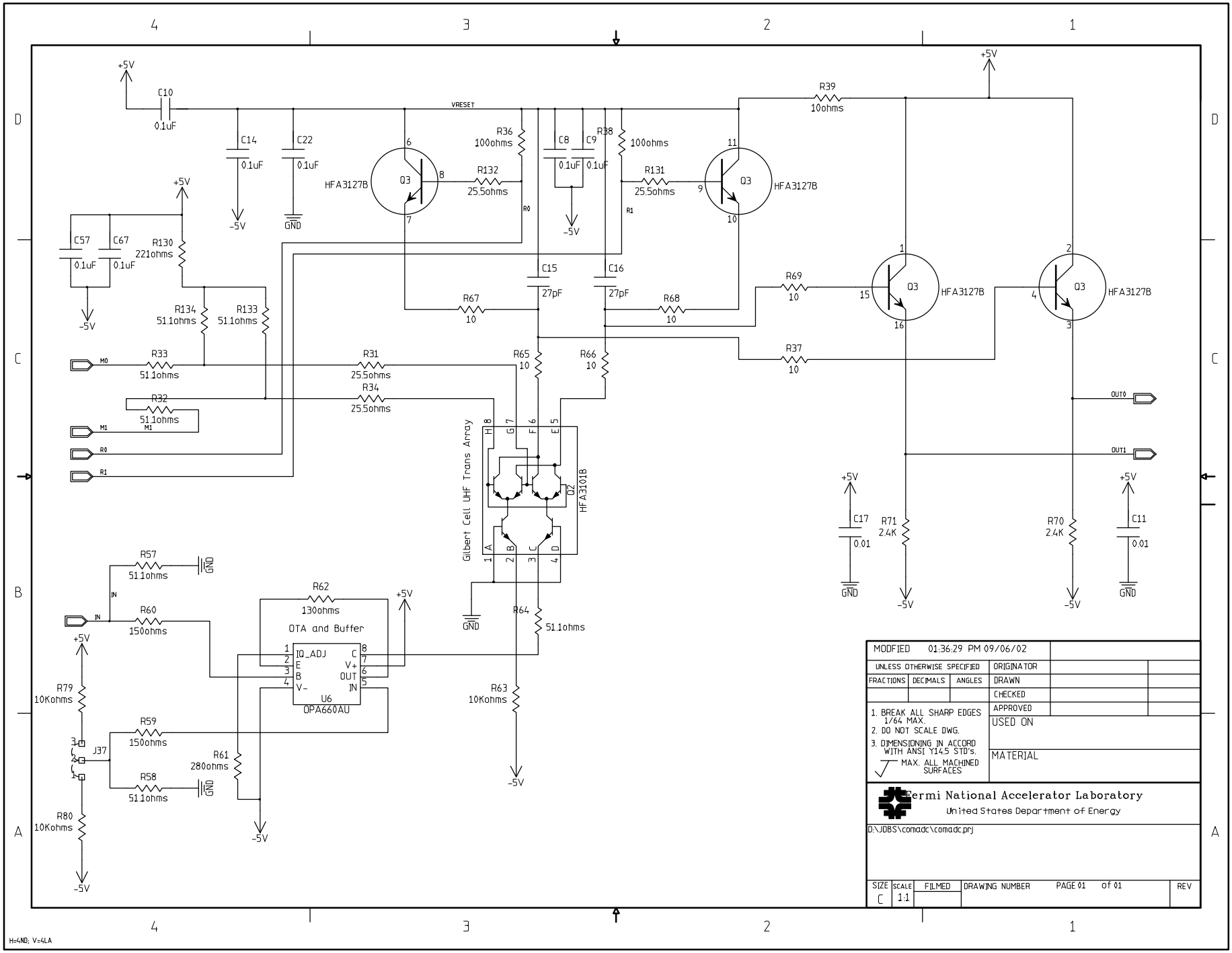
+5V
C10
0.1uF
VRESET
C14
0.1uF
C22
0.1uF
-5V
GND
R36
100ohms
C8
C9
0.1uF
0.1uF
R38
100ohms
R39
10ohms
HFA3127B
Q3
R132
25.5ohms
R131
25.5ohms
R0
R1
C57
C67
0.1uF
0.1uF
R130
221ohms
R134
51.1ohms
R133
51.1ohms
C15
27pF
C16
27pF
R67
10
R68
10
R69
10
R37
10
M0
R33
51.1ohms
R31
25.5ohms
R32
51.1ohms
M1
R34
25.5ohms
R65
10
R66
10
OUT0
OUT1
Gilbert Cell UHF Trans Array
HFA3101B
Q2
C17
0.01
R71
2.4K
R70
2.4K
C11
0.01
R57
51.1ohms
IN
R60
150ohms
R62
130ohms
OTA and Buffer
IO_ADJ
E
B
V-
C
V+
OUT
IN
U6
OPA660AU
R64
51.1ohms
R63
10Kohms
R79
10Kohms
J37
R59
150ohms
R61
280ohms
R58
51.1ohms
R80
10Kohms
MODFIED 01:36:29 PM 09/06/02
UNLESS OTHERWISE SPECIFIED
FRACTIONS DECIMALS ANGLES
ORIGINATOR
DRAWN
CHECKED
APPROVED
1. BREAK ALL SHARP EDGES 1/64 MAX.
2. DO NOT SCALE DWG.
3. DIMENSIONING IN ACCORD WITH ANSI Y14.5 STD's.
MAX. ALL MACHINED SURFACES
USED ON
MATERIAL
Fermi National Accelerator Laboratory
United States Department of Energy
D:\JOBS\comadc\comadc.prj
SIZE C
SCALE 1:1
FILMED
DRAWING NUMBER
PAGE 01 of 01
REV
H=4ND; V=4LA

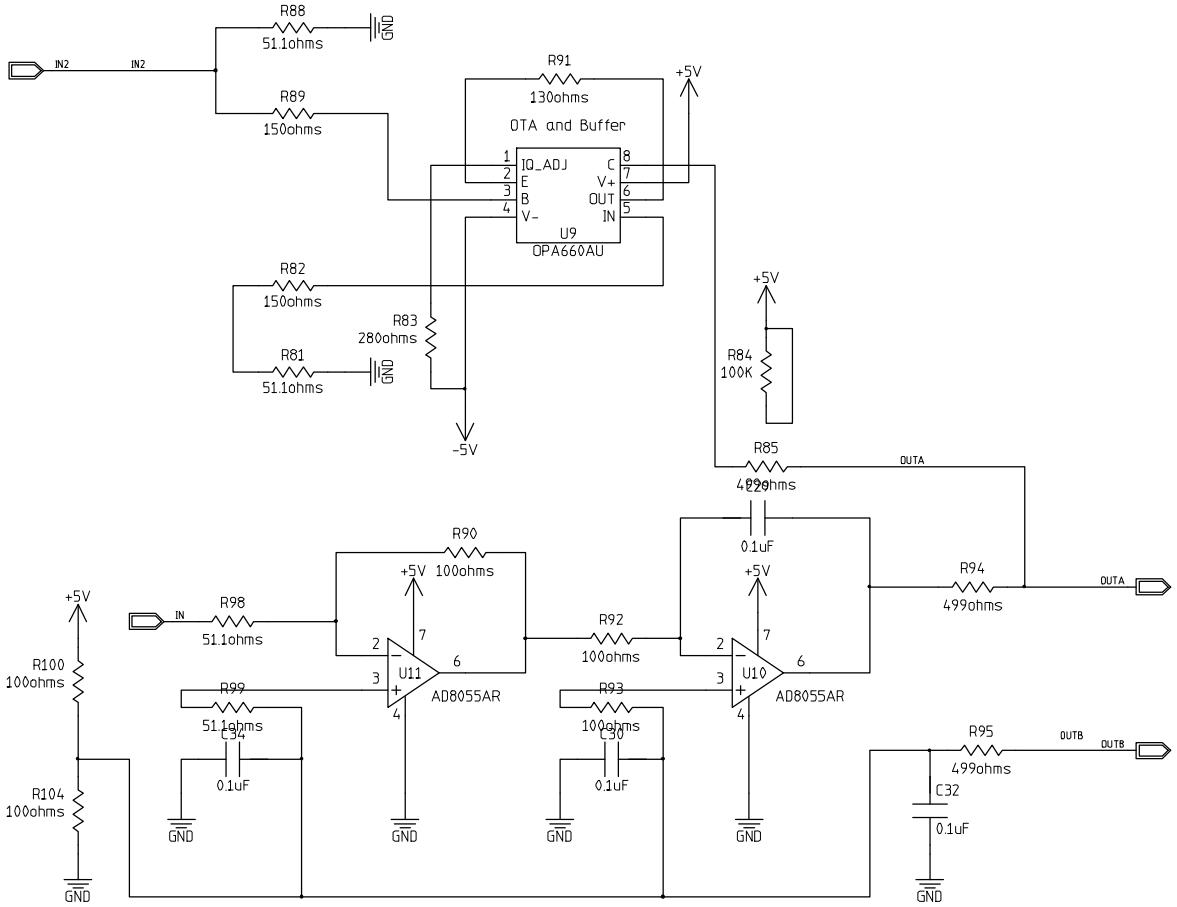

MODFIED 12:20:25 PM 08/12/02				
UNLESS OTHERWISE SPECIFIED			ORIGINATOR	
FRACTIONS	DECIMALS	ANGLES	DRAWN	
			CHECKED	
1. BREAK ALL SHARP EDGES 1/64 MAX.			APPROVED	
2. DO NOT SCALE DWG.			USED ON	
3. DIMENSIONING IN ACCORD WITH ANSI Y14.5 STD's.			MATERIAL	
√ MAX. ALL MACHINED SURFACES				

Fermi National Accelerator Laboratory
United States Department of Energy

D:\JOBS\comadc\comadc.prj

SIZE	SCALE	FILMED	DRAWING NUMBER	PAGE 01 of 01	REV
C	1:1				

H=4ND; V=4LA

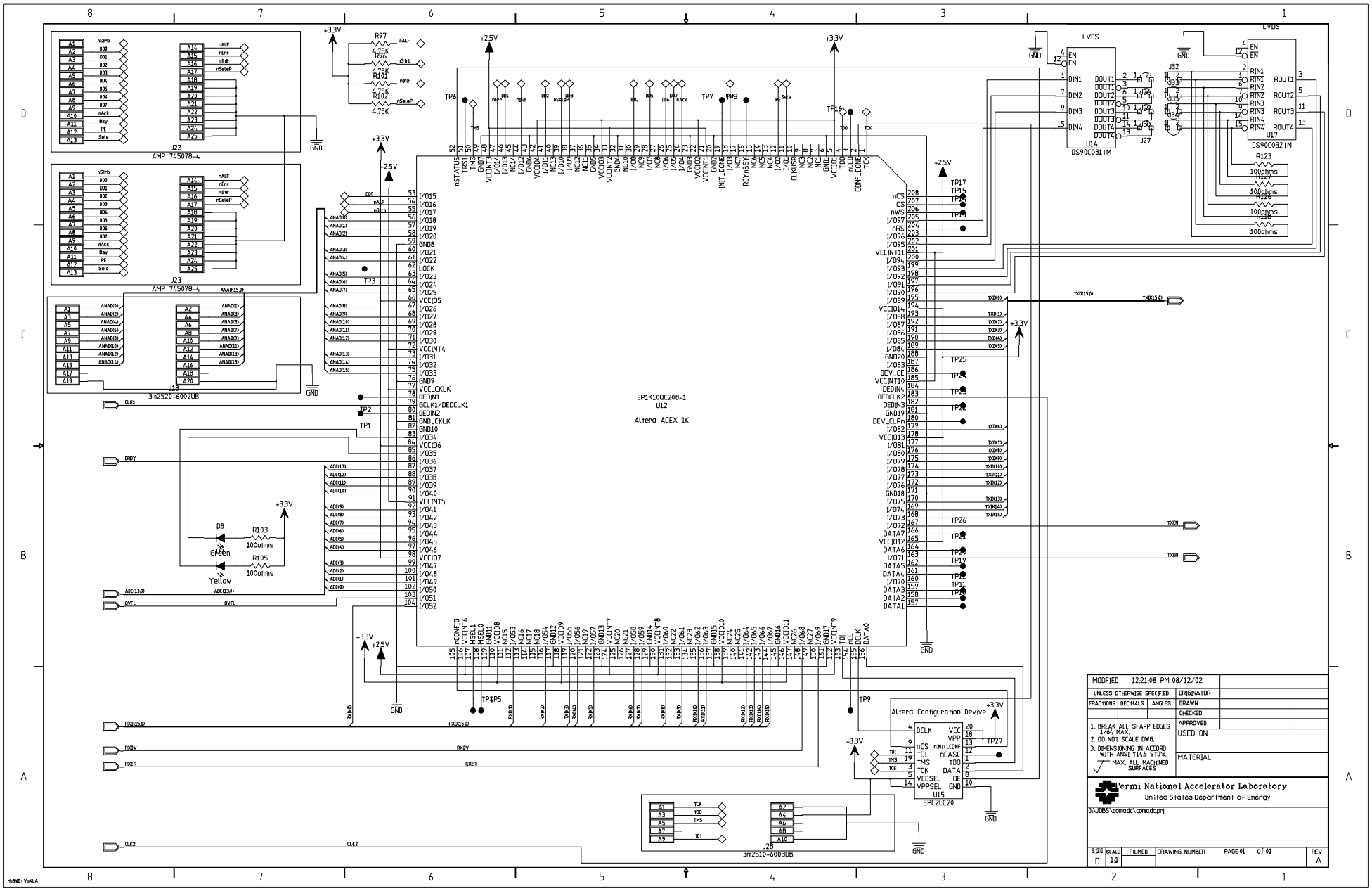

EP1K100C208-1
U12
Altera ACEX 1K
J22
AMP 745078-4
J23
AMP 745078-4
J18
3m2520-6002UB
J28
3m2510-6003UB
U14
DS90C031TM
U17
DS90C032TM
U15
EPC2LC20
Altera Configuration Devive
LVDS
D8
Green
Yellow
R103
100ohms
R105
100ohms
R97
4.75K
R96
4.75K
R101
4.75K
R102
4.75K
R123
100ohms
R127
100ohms
R126
100ohms
R118
100ohms
+3.3V
+2.5V
GND
MODIFIED 12:21:08 PM 08/12/02
UNLESS OTHERWISE SPECIFIED
FRACTIONS DECIMALS ANGLES
ORIGINATOR
DRAWN
CHECKED
APPROVED
USED ON
MATERIAL
1. BREAK ALL SHARP EDGES 1/64 MAX.
2. DO NOT SCALE DWG.
3. DIMENSIONING IN ACCORD WITH ANSI Y14.5 STD's.
MAX. ALL MACHINED SURFACES
Fermi National Accelerator Laboratory
United States Department of Energy
D:\JOBS\comadc\comadc.prj
SIZE D
SCALE 1:1
FILMED
DRAWING NUMBER
PAGE 01 OF 01
REV A

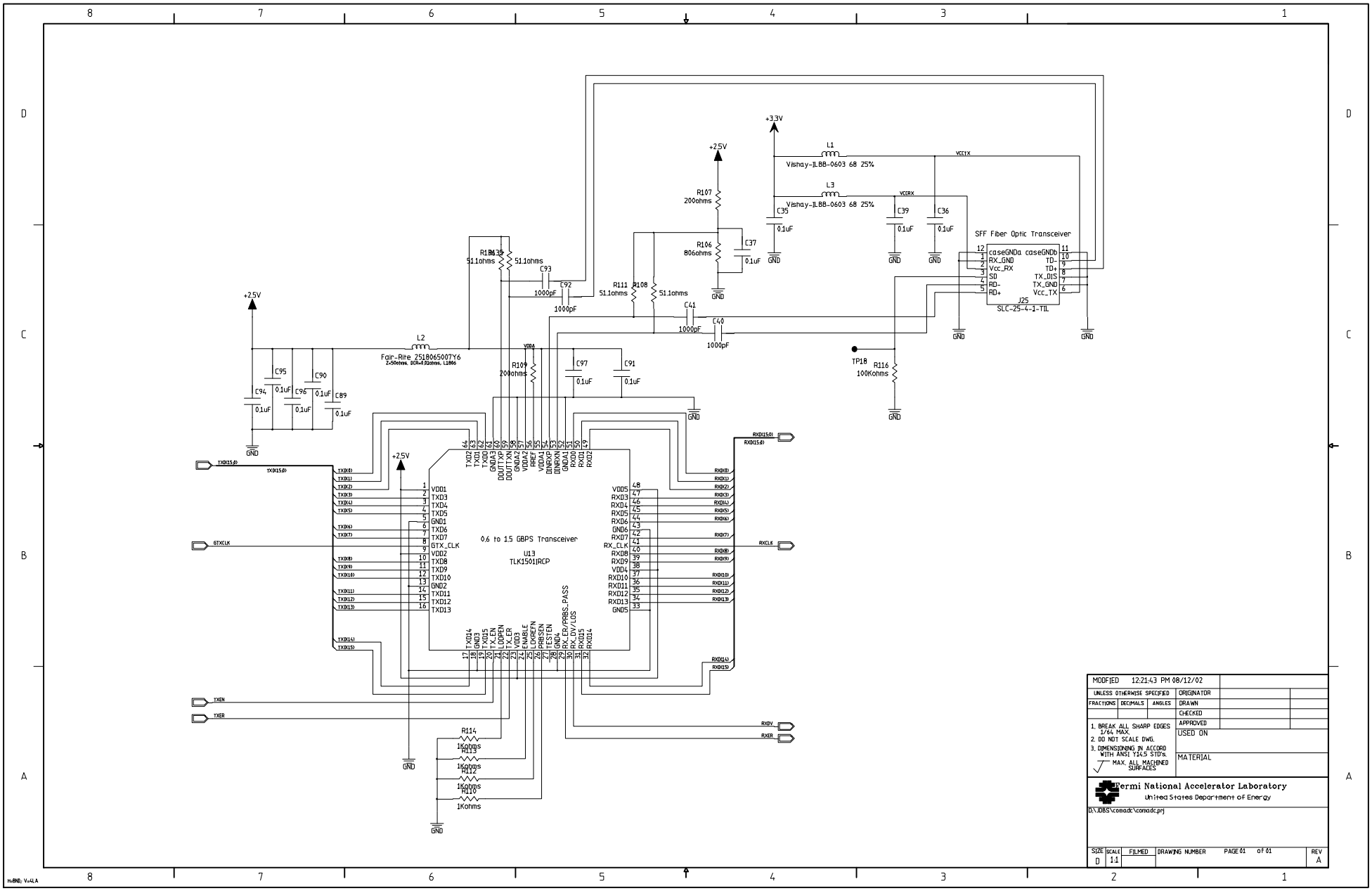

MODIFIED 12:21:43 PM 08/12/02			
UNLESS OTHERWISE SPECIFIED		ORIGINATOR	
FRACTIONS	DECIMALS	ANGLES	DRAWN
			CHECKED
			APPROVED
1. BREAK ALL SHARP EDGES 1/64 MAX.			USED ON
2. DO NOT SCALE DWG.			
3. DIMENSIONING IN ACCORD WITH ANSI Y14.5 STD's.			MATERIAL
MAX. ALL MACHINED SURFACES			

Fermi National Accelerator Laboratory
United States Department of Energy

D:\JOBS\comadc\comadc.prj

SIZE	SCALE	FILMED	DRAWING NUMBER	PAGE 01 of 01	REV
D	1:1				A

H=BND; V=4LA

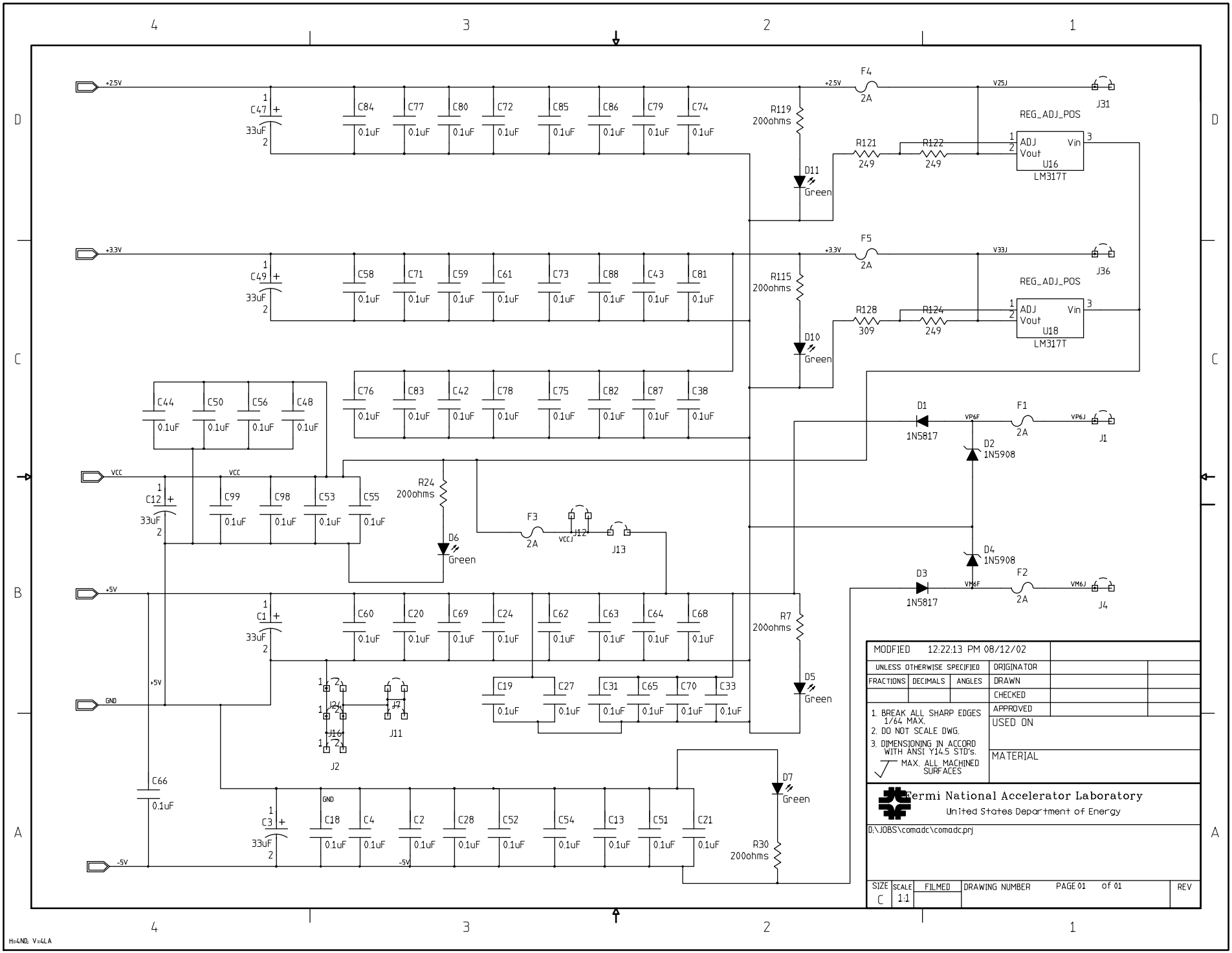
+2.5V
C47 33uF
C84 C77 C80 C72 C85 C86 C79 C74 0.1uF
R119 200ohms
D11 Green
F4 2A
V25J
J31
REG_ADJ_POS
ADJ Vout Vin
U16 LM317T
R121 249
R122 249
+3.3V
C49 33uF
C58 C71 C59 C61 C73 C88 C43 C81 0.1uF
R115 200ohms
D10 Green
F5 2A
V33J
J36
REG_ADJ_POS
ADJ Vout Vin
U18 LM317T
R128 309
R124 249
C76 C83 C42 C78 C75 C82 C87 C38 0.1uF
C44 C50 C56 C48 0.1uF
D1 1N5817
F1 2A
VP6F
VP6J
J1
D2 1N5908
VCC
C12 33uF
C99 C98 C53 C55 0.1uF
R24 200ohms
D6 Green
F3 2A
VCCJ
J12
J13
D4 1N5908
D3 1N5817
F2 2A
VM6F
VM6J
J4
+5V
C1 33uF
C60 C20 C69 C24 C62 C63 C64 C68 0.1uF
R7 200ohms
D5 Green
GND
J24
J16
J2
J7
J11
C19 C27 C31 C65 C70 C33 0.1uF
C66 0.1uF
C3 33uF
C18 C4 C2 C28 C52 C54 C13 C51 C21 0.1uF
-5V
D7 Green
R30 200ohms
MODFIED 12:22:13 PM 08/12/02
UNLESS OTHERWISE SPECIFIED
FRACTIONS DECIMALS ANGLES
ORIGINATOR
DRAWN
CHECKED
APPROVED
USED ON
1. BREAK ALL SHARP EDGES 1/64 MAX.
2. DO NOT SCALE DWG.
3. DIMENSIONING IN ACCORD WITH ANSI Y14.5 STD's.
MAX. ALL MACHINED SURFACES
MATERIAL
Fermi National Accelerator Laboratory
United States Department of Energy
D:\JOBS\comadc\comadc.prj
SIZE C
SCALE 1:1
FILMED
DRAWING NUMBER
PAGE 01 of 01
REV
H=4ND; V=4LA