Silicon Detectors - Outline

- **Part I**
  - **Physics Requirements**
  - **Solid State Detector Physics**
  - **Detector Design**
  - **Radiation Damage**
- **Part II**
  - **Electronics and readout**
  - **Mechanical and construction - Production and Testing**

- **References**
  - **Radeka, Ann. Rev. Nucl. Part. Sci. 1988, 217-277.**
  - **Helmudt Spieler lecture notes (www-physics.lbl.gov/~spieler)**
  - **Sze, Physics of Semiconductor Devices**
  - **CMS and ATLAS notes**

R. Lipton
March 1,8 2000

Silicon Trackers

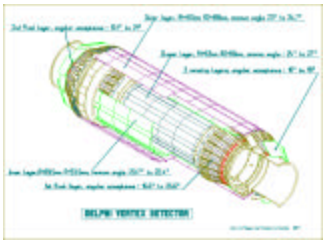

Delphi

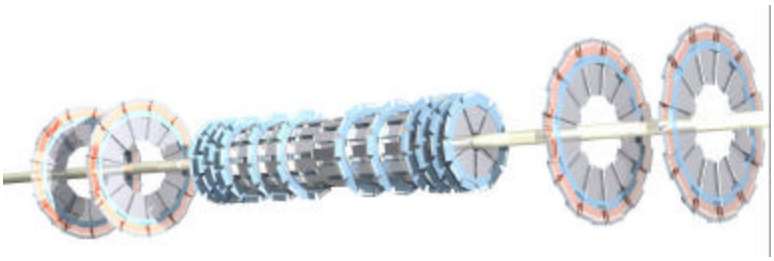

D0

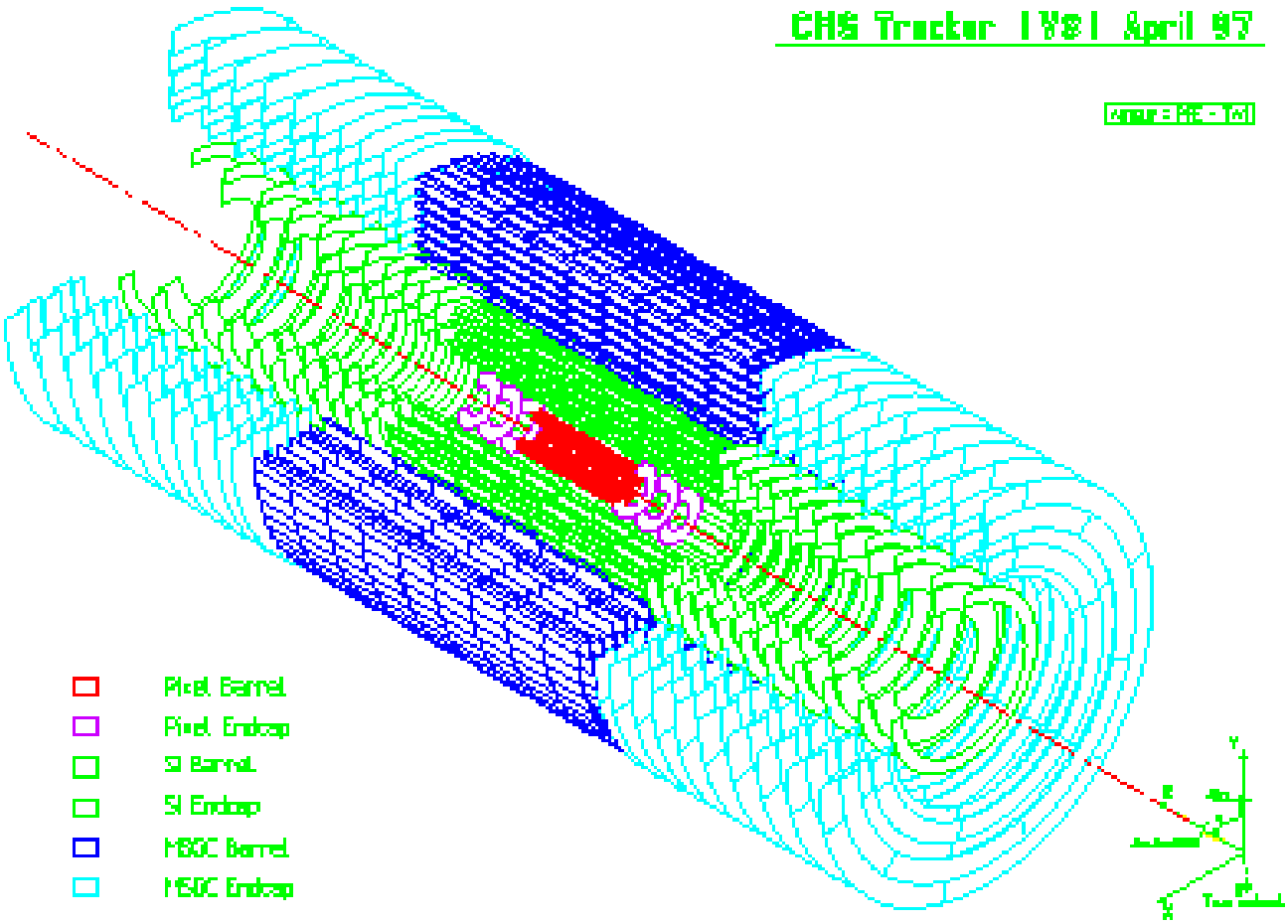

Physics Requirements - Position resolution

- **Resolution scales set by B and C secondary vertex reconstruction:**

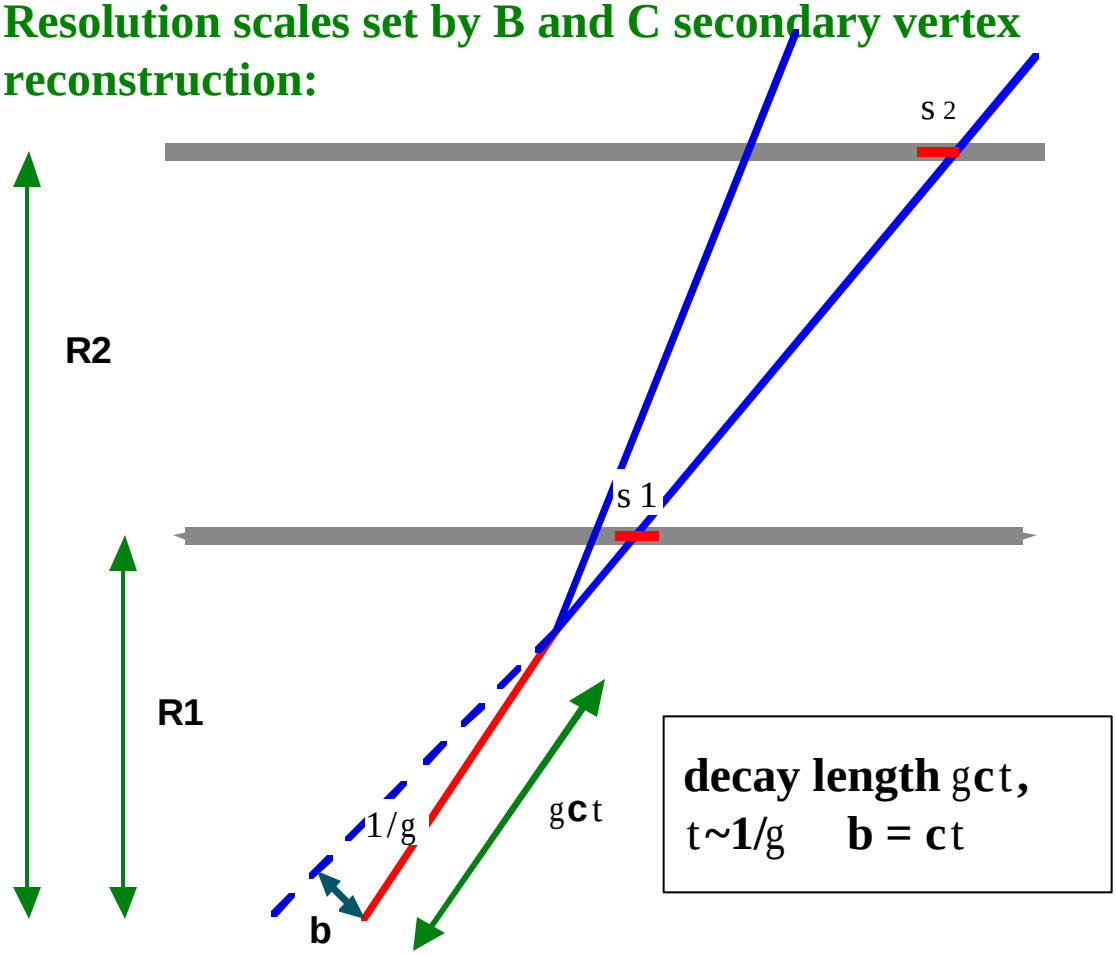

B lifetime: ct ~ 450mm

For a simple 2 plane system with $s_1 = s_2 = s$ the resolution depends only on relative radii

$$s_{ip} = s_{meas}\left(\frac{\sqrt{1+(\frac{R_1}{R_2})^2}}{(1-\frac{R_1}{R_2})}\right)$$

R. Lipton
March 1,8 2000

Solid State Detector Physics - energy loss and ionization

- **Silicon has properties which make it especially desirable as a detector material**
  - **low ionization energy (good signal)**
  - **long mean free path (good charge collection efficiency)**
  - **high mobility (fast charge collection)**
  - **low Z (low multiple scattering)**
  - **Very well developed technology**

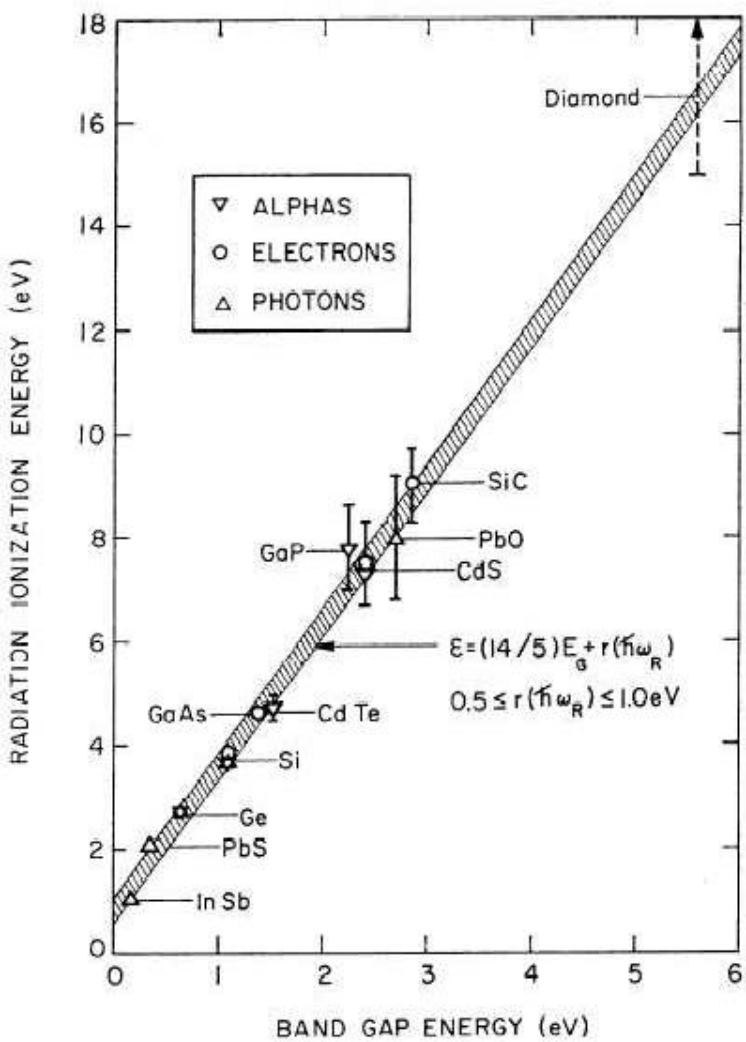

R
M

C.A. Klein, J. Applied Physics **39** (1968) 2029

Solid State Detector Physics - band structures

- Silicon detectors are typically high resistivity >1 KW-cm "float zone" silicon
- The small energy gap between impurity "donor" or "acceptor" levels means most mobile electrons and holes are due to dopants.

band diagram | density of states | Fermi-dirac distribution | carrier concentrations

Intrinsic

n-type

p-type

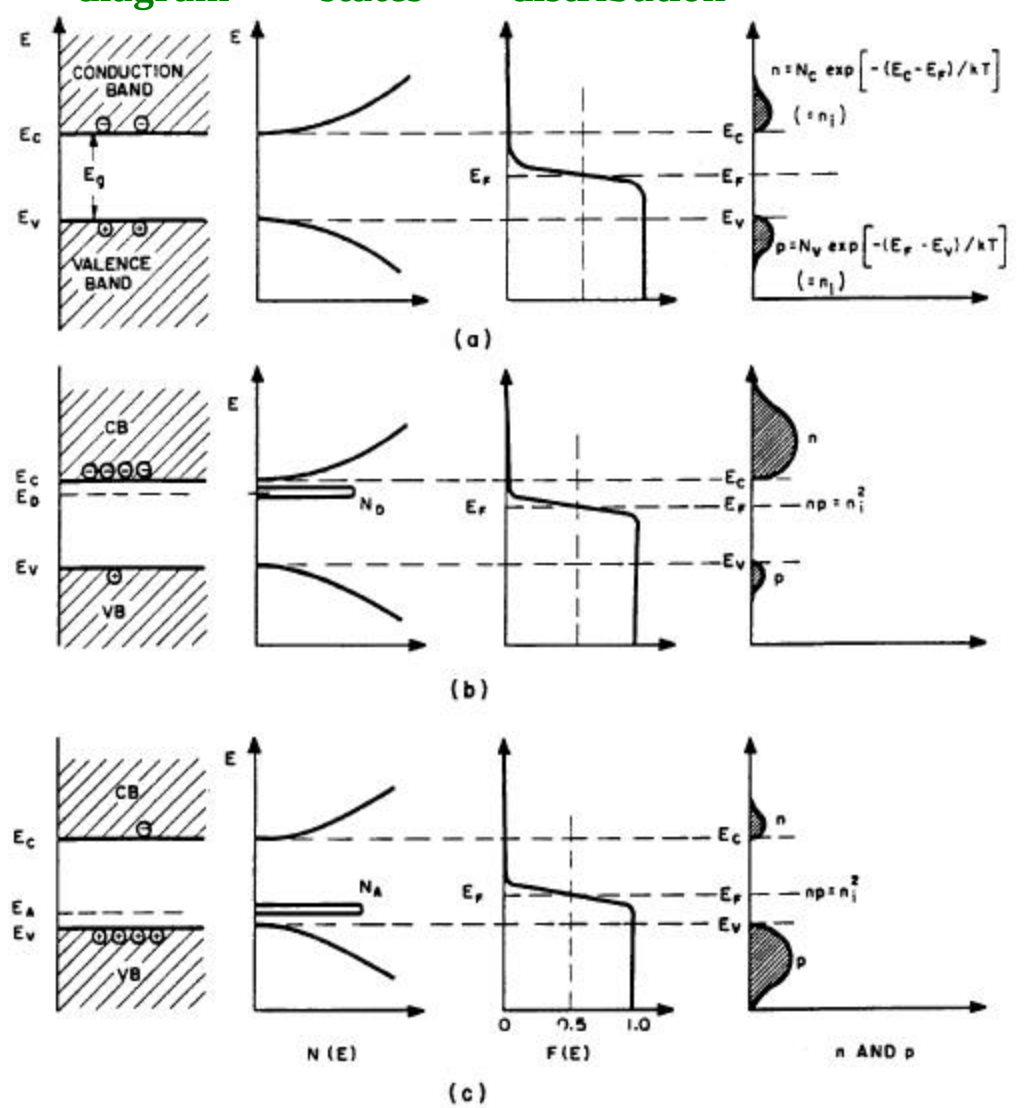

Fig. 14 Schematic band diagram, density of states, Fermi–Dirac distribution, and the carrier concentrations for (a) intrinsic, (b) n-type, and (c) p-type semiconductors at thermal equilibrium. Note that $pn = n_i^2$ for all three cases.

Solid State Detector Physics - charge drift and collection

- **Diode depletion**
  - **Silicon detectors have lightly doped bulk (usually n) and heavily doped contacts. Unusually large depleted area.**
  - **Diffusion of charge carriers will form a local depleted region with no applied voltage**

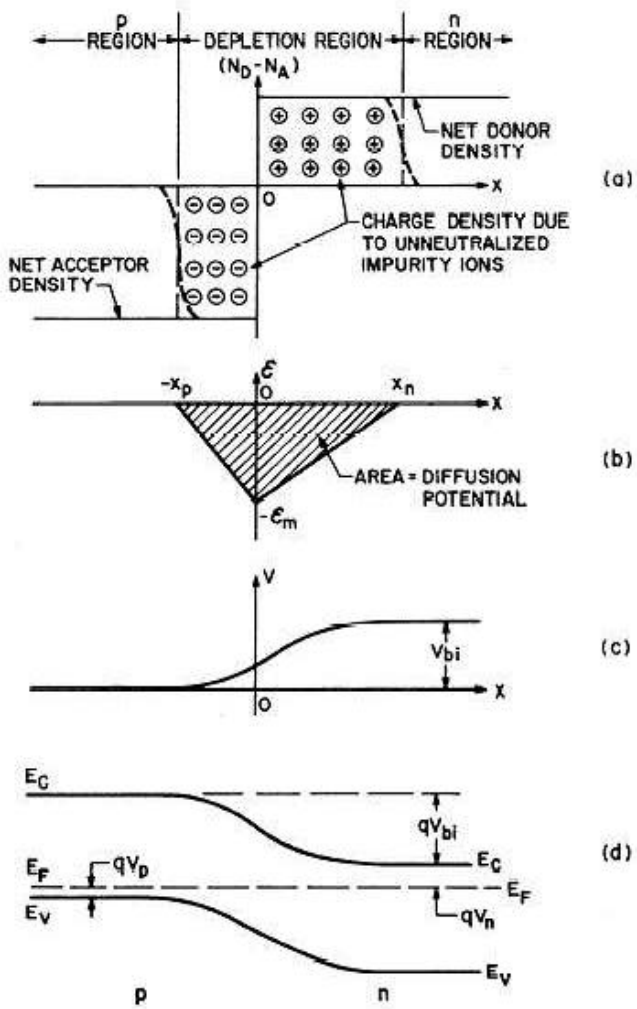

(from Sze, *Physics of Semiconductor Devices*)

R. Lipton
March 1,8 2000

Solid State Detector Physics - device characteristics

Resistivity: $$r = \frac{1}{q(m_n N_n + m_p N_p)}$$

Depletion voltage: $$d = \sqrt{\frac{2e V_{bias}}{qNeff}} \qquad V_{fd} = \frac{N_{eff}\, q\, D^2}{2e}$$

Electric Field: $$E(x) = \frac{2V_{fd}}{D}\left(1 - \frac{x}{D}\right) + \frac{V_{bias} - V_{fd}}{D}$$

$m_{e,h}$ = **electron, hole mobility**

N_{eff} = **Effective carrier concentration**

x = distance from junction **D = silicon thickness**

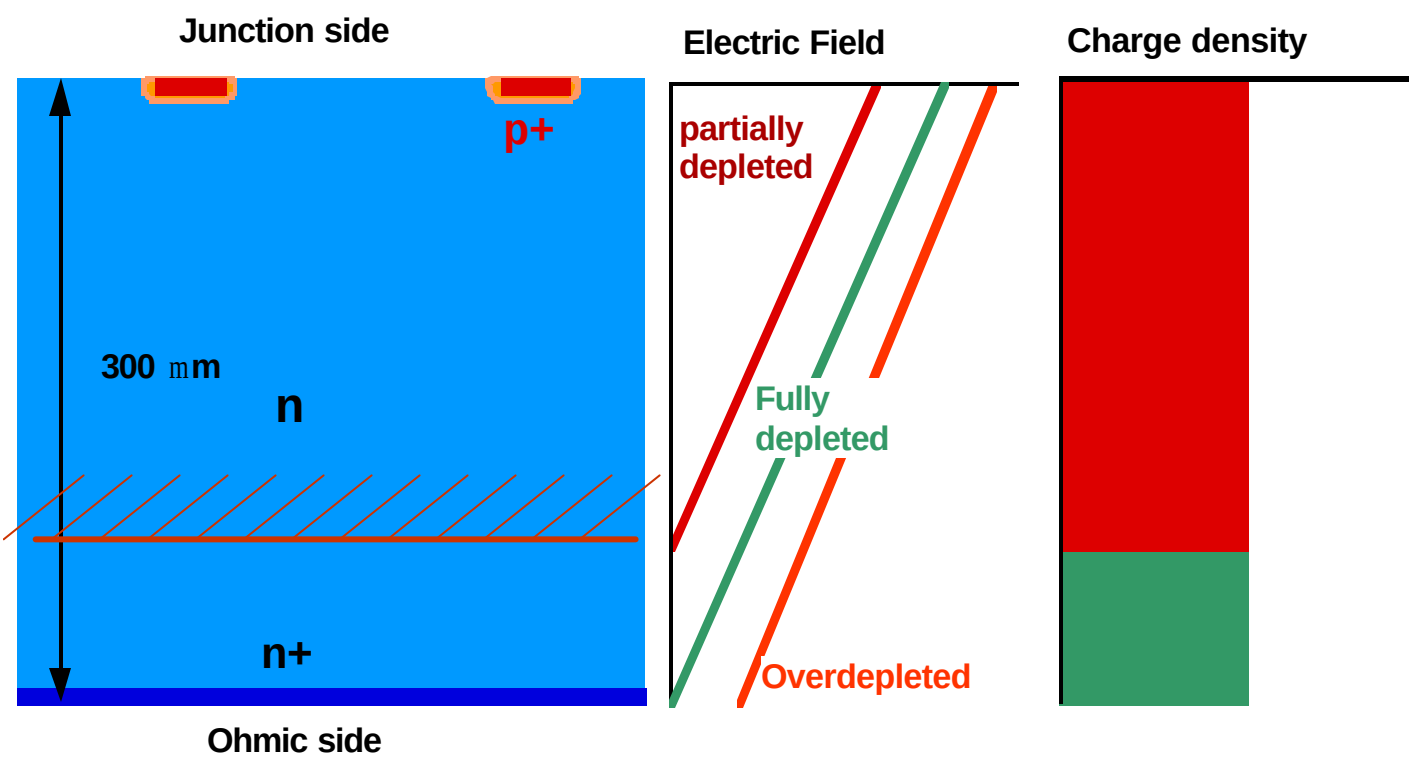

R. Lipton
March 1,8 2000

Single Sided devices - carrier drift

Electron, hole drift: $\vec{V}_{e,h} = \mu_{e,h}\vec{E}(x)$

Drift time to an electrode: $t(x) = \frac{D^2}{2\mu V_d}\ln\left(\frac{V_b - V_d}{V_b - V_d + 2V_d\left(1 - \frac{x}{D}\right)}\right)$

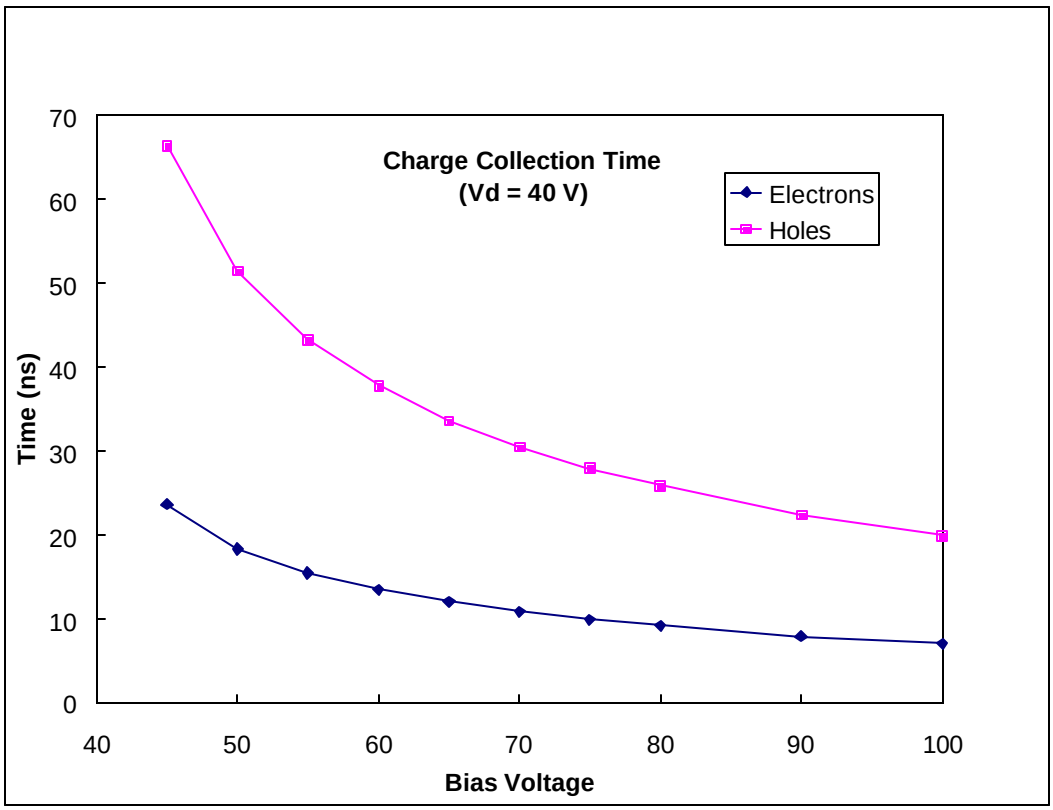

R. Lipton
March 1,8 2000

Recipe for Silicon Detector Production

Basic Process (Parker)

1) clean wafer

2) cover with photoresist
3) prebake

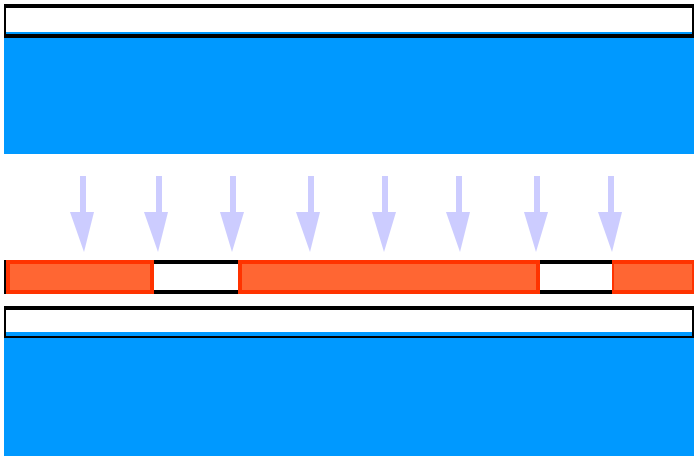

4) expose through mask

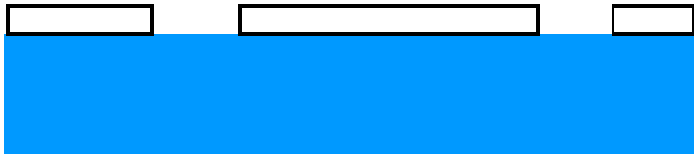

5) develop
6) postbake

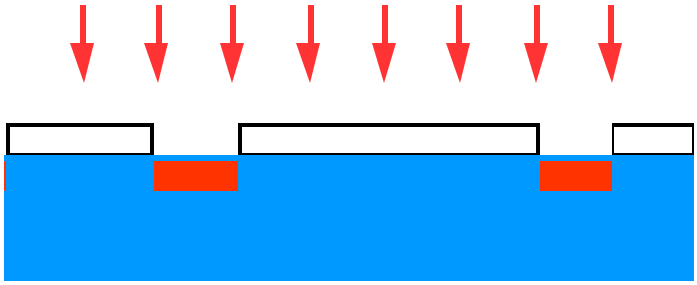

7) Etch, implant, oxyidize …

8) remove resist

R. Lipton
March 1,8 2000

Detector Design - single sided devices

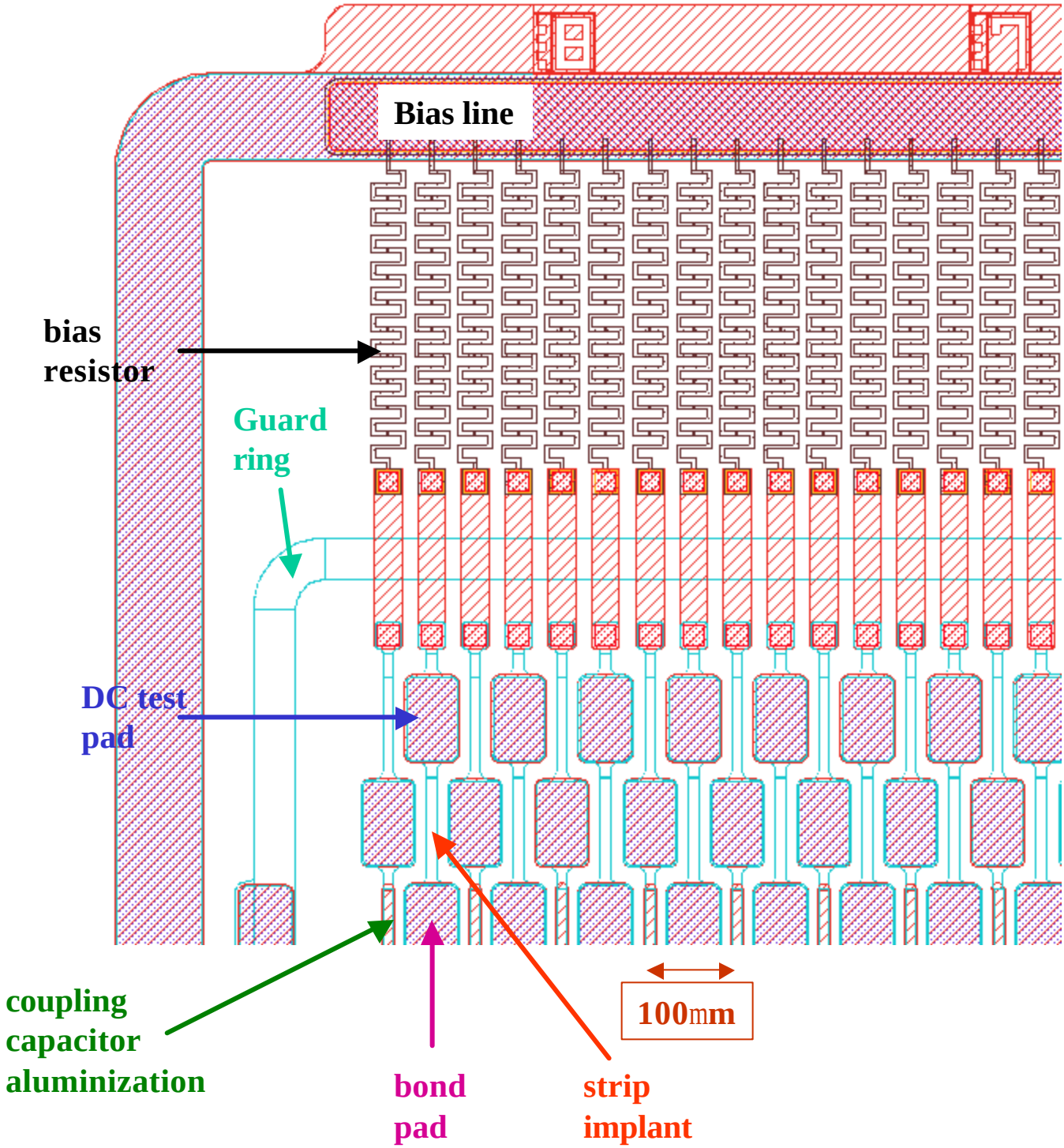

R. Lipton
March 1,8 2000

Detector Design - double sided devices

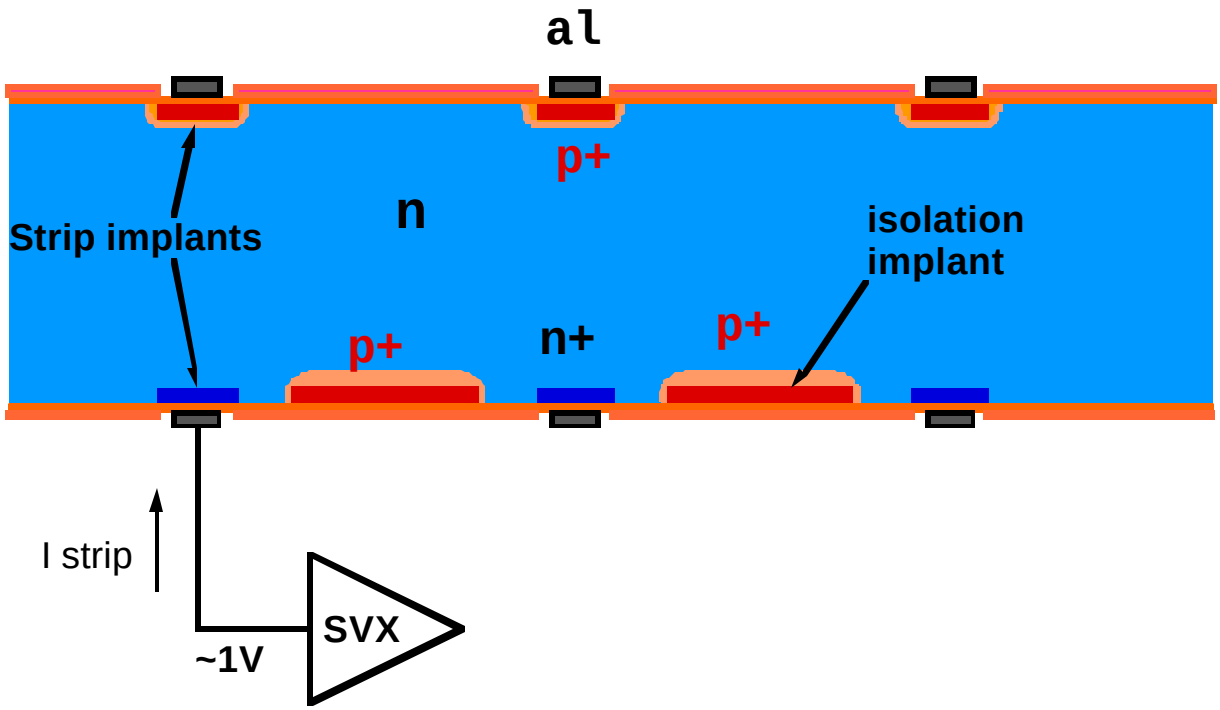

AC Coupling:

- **Add a thin (2000A) SiO2 layer between the p+ and aluminum, This forms an "integrated" capacitor.**
- **Bias the strips with:**
  - **Simple "FOXFET" or punchthrough structure**
  - **polysilicon (CVD amorphous silicon)**

Readout of signal induced on the n (ohmic) side

- **n side implants are "naturally" shorted to each other and must be separated electrically. Charges present in the oxide layer tend to induce conducting channels between n side strips**
- **Add p+ "blocking" strips to ensure strip isolation after the device is fully depleted**

- **Capacitors must support bias voltage**

DS much more complex device than SS: 14 vs 7 "mask steps" to produce

- **Less mass per point, less multiple scattering**

Detector Characteristics

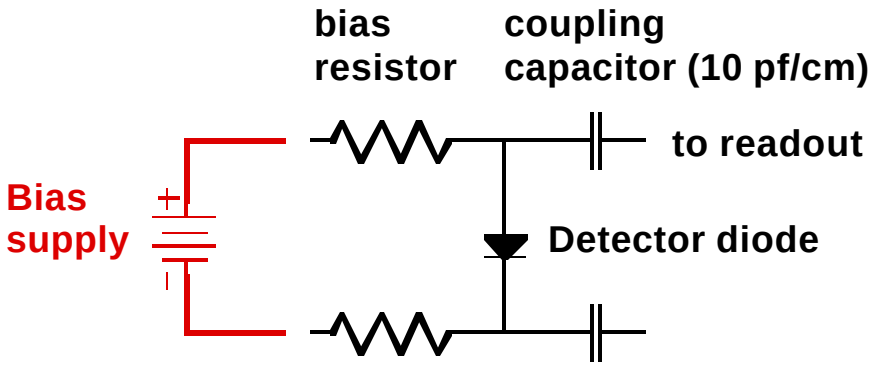

- **Bias resistor integrated on each strip usually:**
  - **Simple diode or FET (FOXFET) structure**
  - **implanted polysilicon resistor**

•Coupling capacitor formed by very thin (2500 A) dielectric. The dielectric is usually a "grown thermal" oxide supplemented with deposited layers formed by CVD (chemical vapor deposition)

•In addition there are "guard rings" which keep the field from reaching the damaged silicon near cut edges.

- **Microdischarge breakdown can occur when fields near the implant increase due to charges in the oxide and potential of the coupling aluminization**

$$V_{break} = \frac{e_{si} E_c^2}{2qNeff}$$

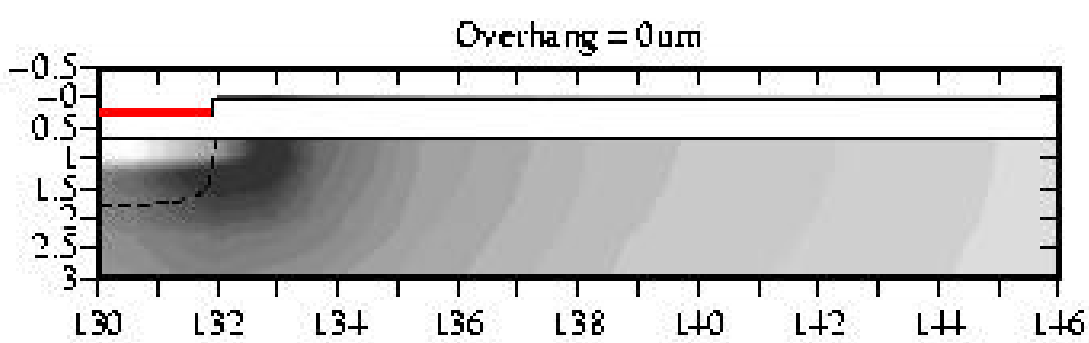

Silicon Surface Region

Charges in the oxide layer can have a dramatic effect on device characteristics.

- **Fixed charge near the Si-SiO_2 boundry (usually +)**
- **Trapped charge near metal layer or in oxide bulk**
- **Mobile charge, usually due to alkali impurities**

- **Oxide charges can induce conducting channels which short n-side strips**

- **Can affect device characteristics, breakdown voltage, strip isolation, interstrip capacitance**

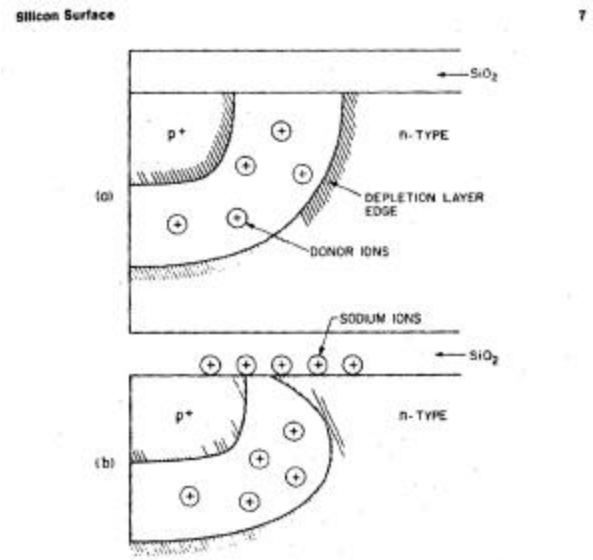

Fig. 1.3 Cross section of a p⁺n junction showing that positive ions in the oxide can increase the lateral field in the depletion layer of a p⁺n junction: (a) no ions in the oxide; (b) positive ions in the oxide pinching in the depletion layer near the Si–SiO_2 interface.

R. Lipton
March 1,8 2000

Detector Design - Double Sided

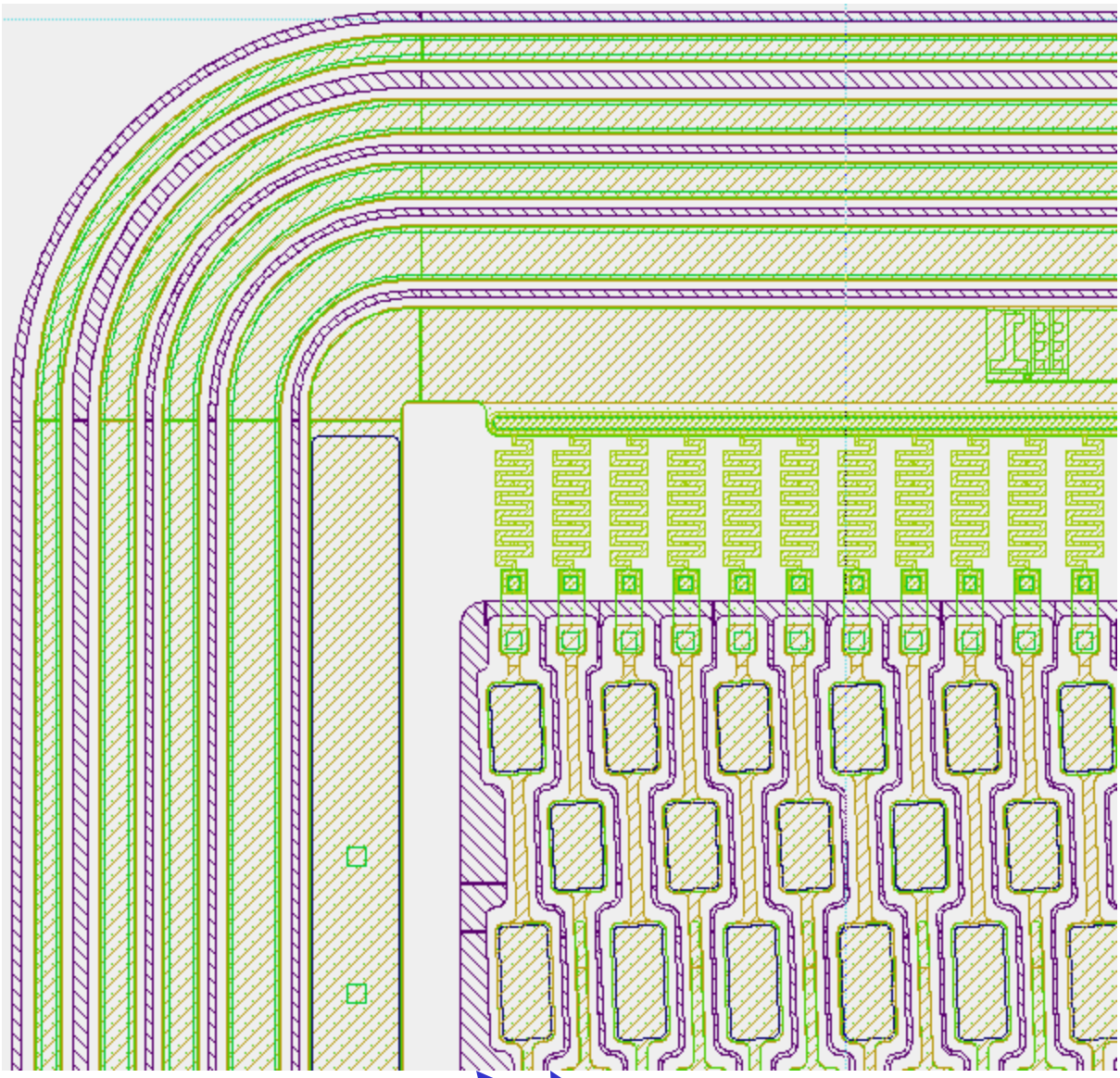

multiple guard rings

p stop implant

R. Lipton
March 1,8 2000

Radiation Damage - Leakage current

- **The leakage current in an irradiated silicon detector will increase linearly with dose:**

$$\Delta I_{leak} = a f V$$

with a ~ 3x10^{17} A/cm, f expressed as the flux normalized to 1 MeV neutrons

- **Temperature dependence:** $I_{leak} = T^2 e^{-\frac{1.2eV}{2kT}}$
currents decrease with time (annealing)

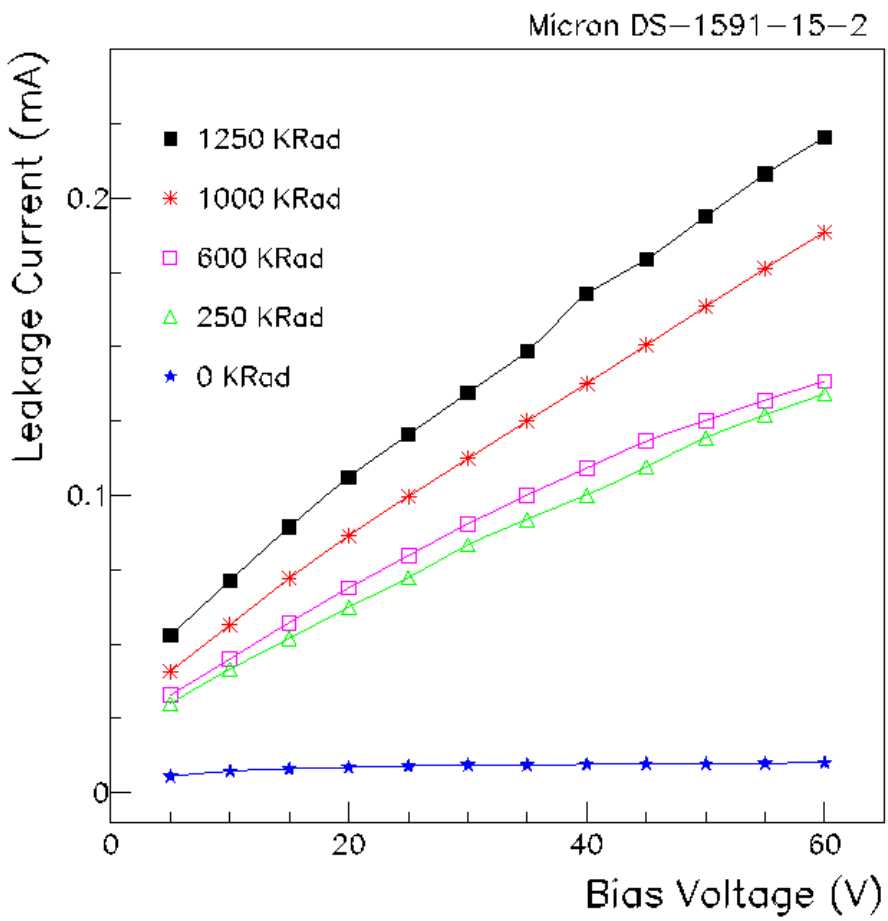

Radiation Damage - Reverse annealing

SSC studies found a complex radiation induced "acceptor generation" effect. Sensitive to time and temperature

$$Neff = -N_0 e^{-c\mathrm{F}} + g_c(\mathrm{F}) + g_s \mathrm{F} e^{-t/t(T)} - N_y(f,t,T)$$

Donor removal **Acceptor creation** **Beneficial annealing** **Reverse annealing**

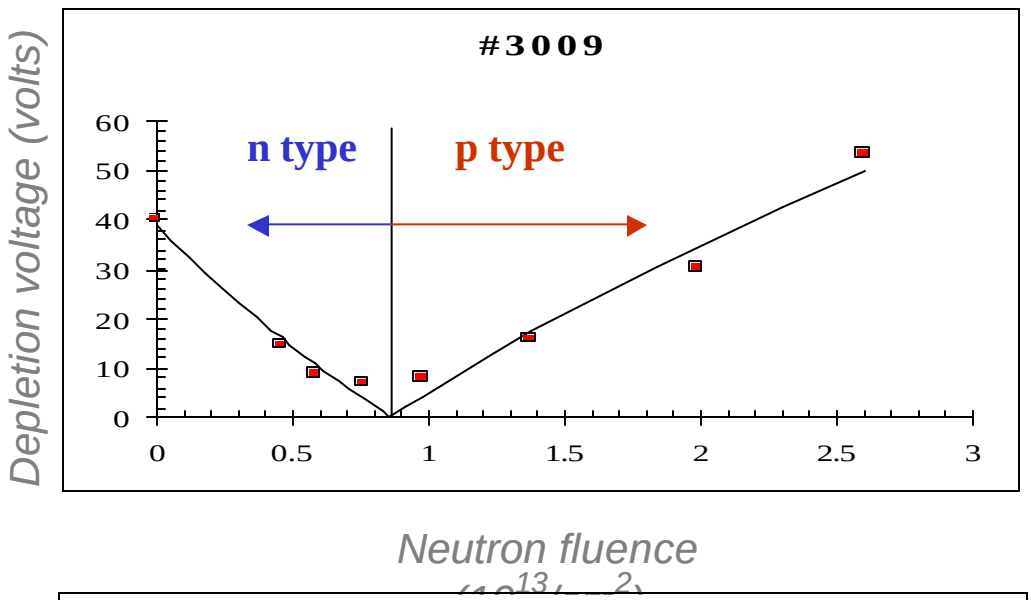

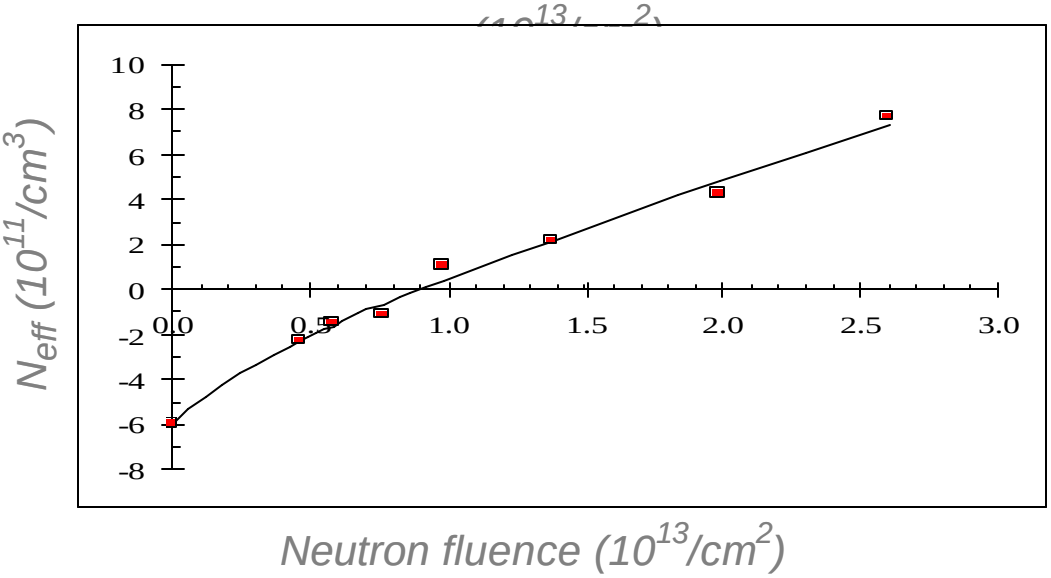

R. Lipton
March 1,8 2000

Radiation Damage - Changes in properties

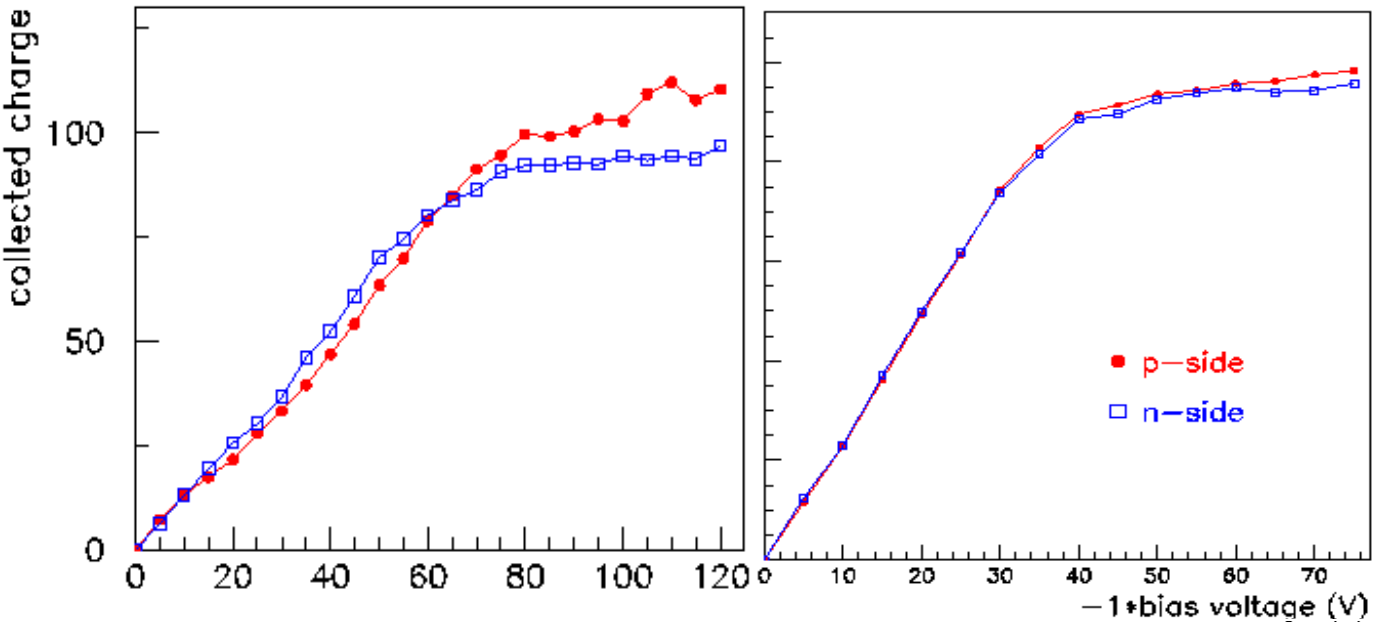

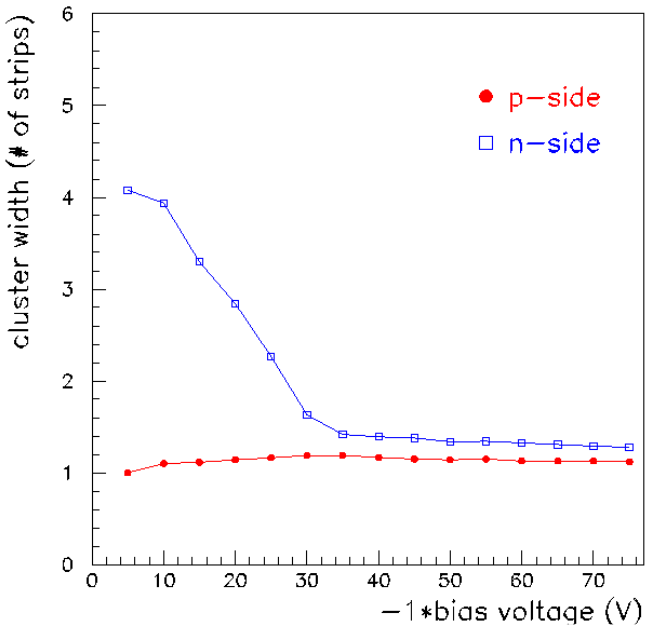

Radiation Damage - Design for maximum detector lifetime

Causes of detector failure after irradiation

- Excessive leakage current (shot noise)
  - AC couple amplifiers
  - Run at low temperature
  - Short shaping time
- High depletion Voltage due to reverse annealing
  - Run at low temperature ("freeze" defects)
  - Use n-bulk devices with high initial depletion voltage (later type inversion)
  - Improve coupling capacitor breakdown
    - Multilayer dielectric
    - Split bias
    - design shielding structures
- Device breakdown due to high Vd
  - Multi-guard ring designs
  - Careful device layout to avoid breakdown
- Use single sided devices

CMS:

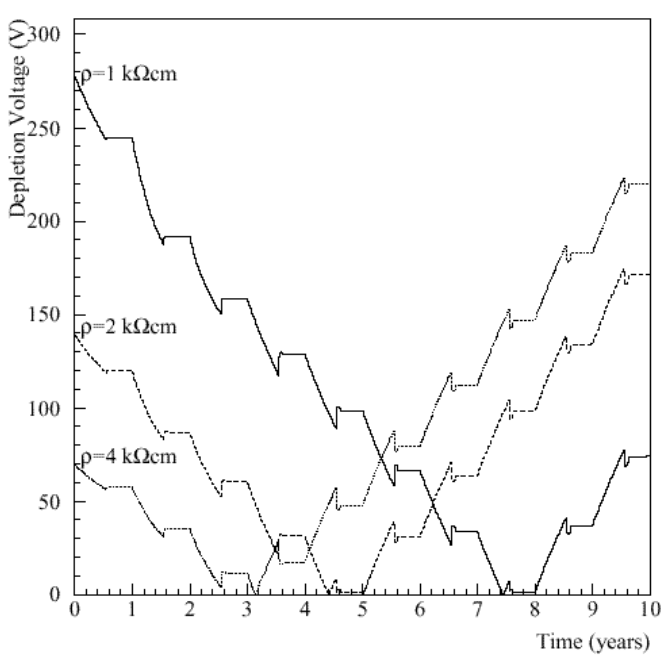

R. Lipton
March 1,8 2000