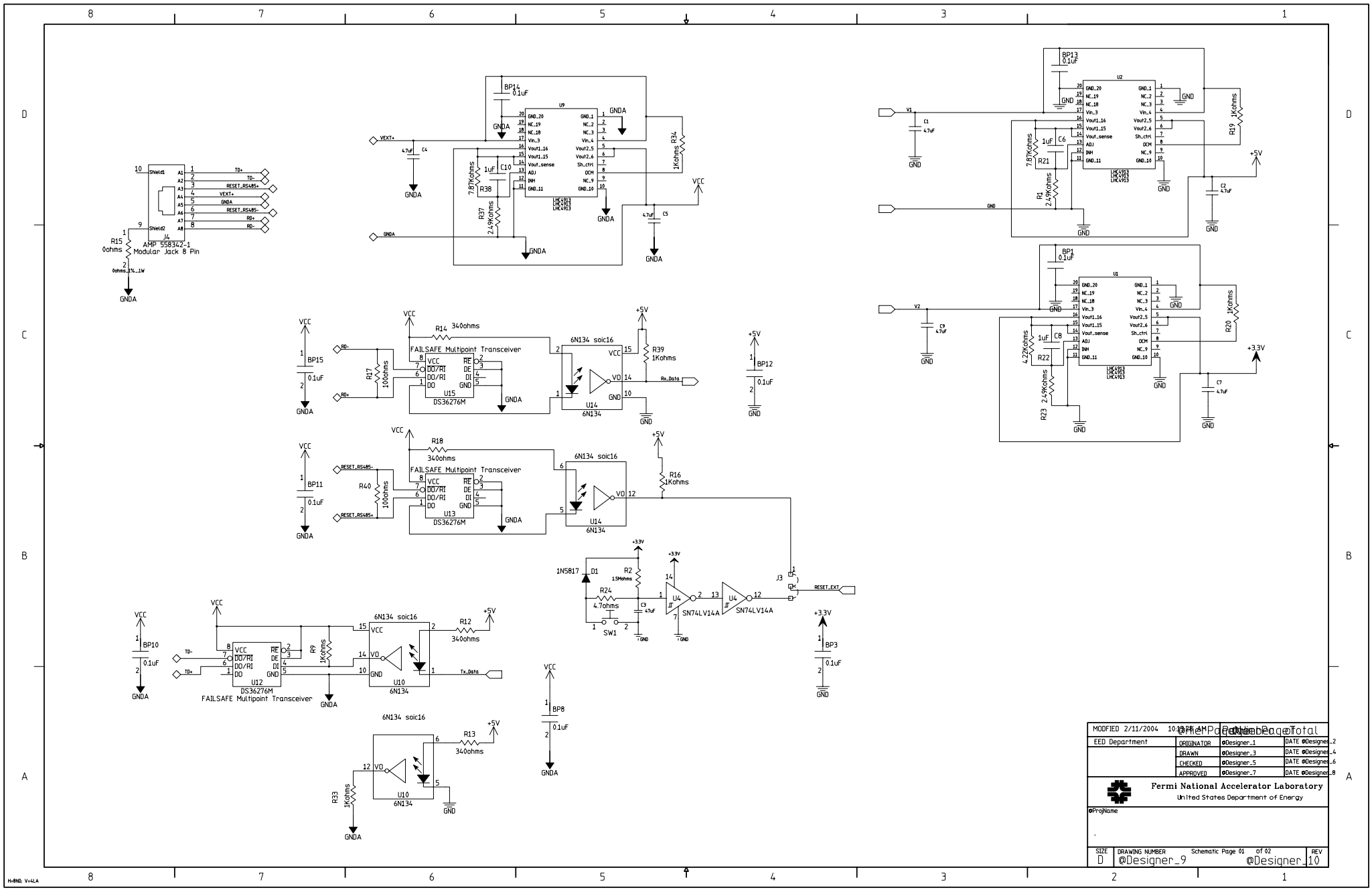

AMP 558342-1
Modular Jack 8 Pin
FAILSAFE Multipoint Transceiver
DS36276M
6N134 soic16
SN74LV14A
MODFIED 2/11/2004
EED Department
ORIGINATOR
DRAWN
CHECKED
APPROVED
Fermi National Accelerator Laboratory
United States Department of Energy
SIZE
D
DRAWING NUMBER
@Designer_9
Schematic Page 01 of 02
REV
@Designer_10

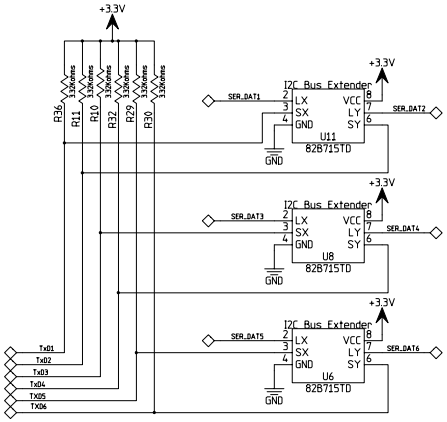

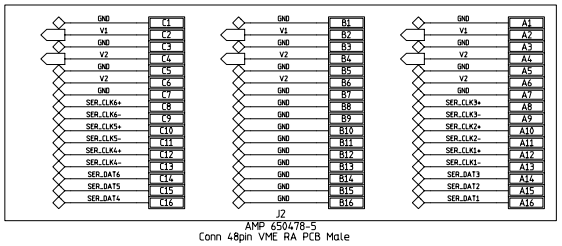

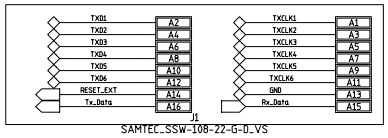

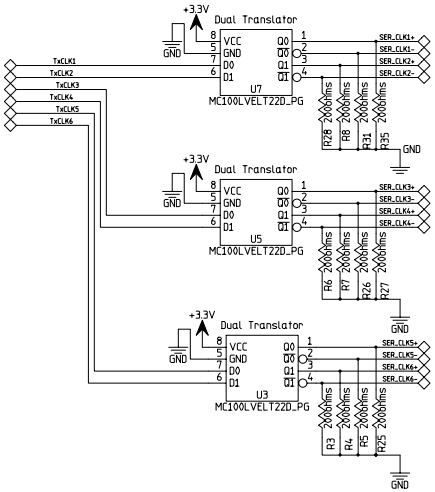

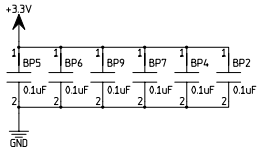

MODIFIED 2/11/2004 10:18:18 AM	Sheet Page 02 of Total		
EED Department	ORIGINATOR	@Designer_1	DATE @Designer_2
	DRAWN	@Designer_3	DATE @Designer_4
	CHECKED	@Designer_5	DATE @Designer_6
	APPROVED	@Designer_7	DATE @Designer_8

Fermi National Accelerator Laboratory
United States Department of Energy

@ProjName

.

SIZE	DRAWING NUMBER		REV
D	@Designer_9	Schematic Page 02 of 02 @Designer_10	

H=BND: V=4LA