REV	DESCRIPTION	DRAWN	DATE
		APPROVED	DATE
A	HOLE WAS 1.7mm	J. SCHELLPFEFFER	09-JUN-2006

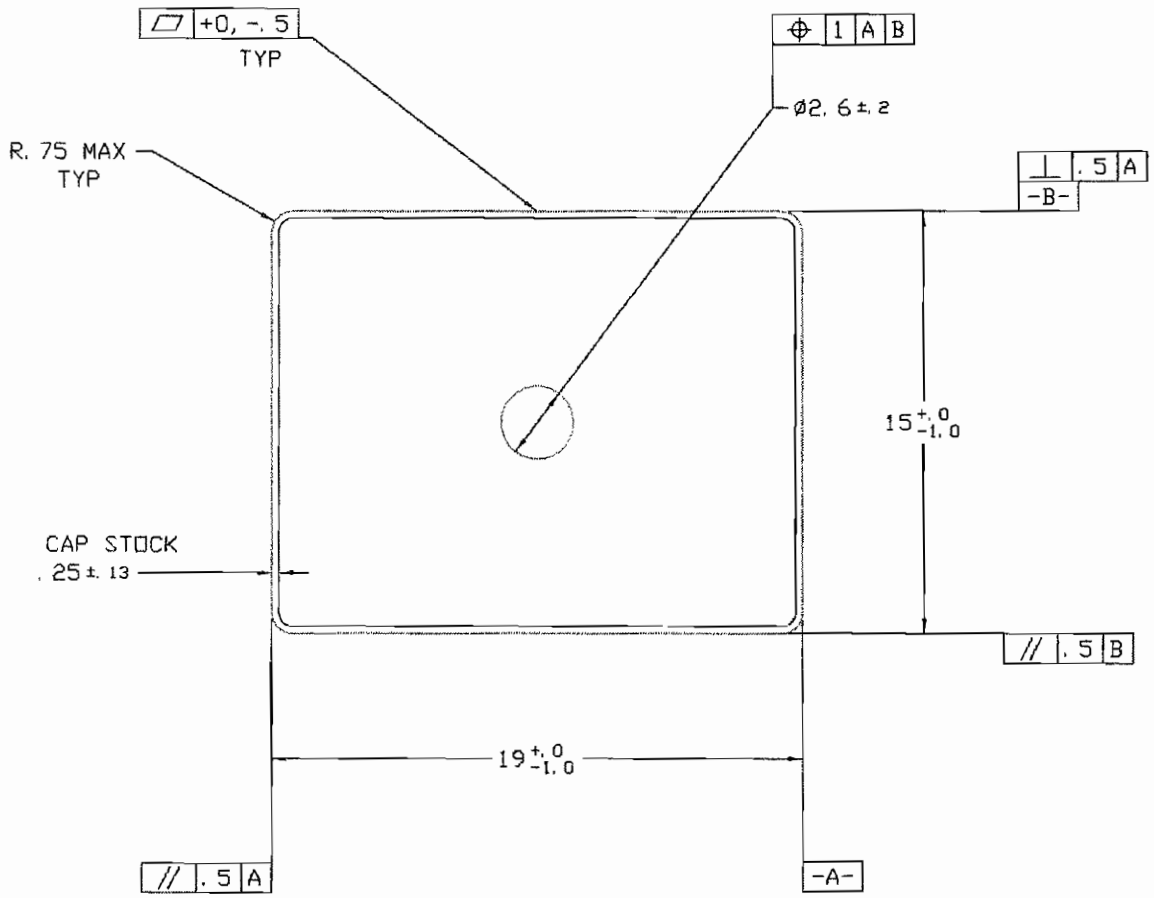

6X SCALE

UNLESS OTHERWISE SPECIFIED			ORIGINATOR	C. SERRITELLA	06-SEP-2005
.XX			DRAWN	J. SCHELLPFEFFER	06-SEP-2005
± .13	±	±	CHECKED	C. SERRITELLA	13-SEP-2005
			APPROVED	A. PLA-DALMAU	13-SEP-2005

1. BREAK ALL SHARP EDGES MAX.
2. DO NOT SCALE DRAWING.
3. DIMENSIONS BASED UPON ASME Y14.5M-1994
4. MAX. ALL MACH. SURFACES ✓
5. DRAWING UNITS: mm

USED ON

MATERIAL
SCINTILLATING POLYSTYRENE

FERMI NATIONAL ACCELERATOR LABORATORY
UNITED STATES DEPARTMENT OF ENERGY

PPD
MINERVA
2 X 2 SHAPE

SCALE	DRAWING NUMBER	SHEET	REV
AS NOTED	9219.000-MB-241843	1 OF 1	A

CREATED WITH: IdeasUNXSeries | GROUP: PPD/MECHANICAL DEPARTMENT

3-RIGHT