REV	DESCRIPTION	DRAWN	DATE
		APPROVED	DATE
A	HOLE WAS 1.7mm	J. SCHELLPFEFFER	09-JUN-2006

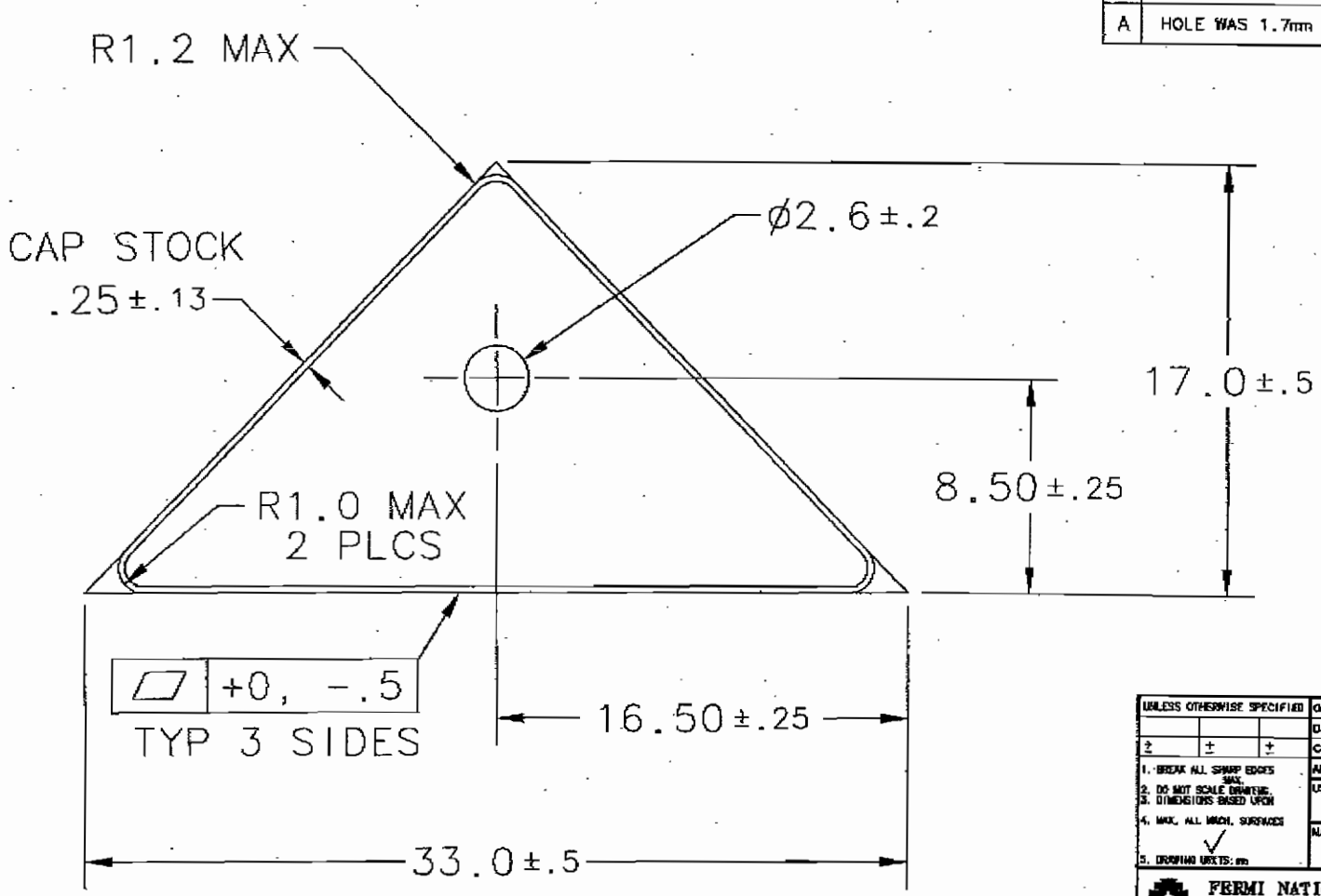

6X SCALE

UNLESS OTHERWISE SPECIFIED			ORIGINATOR	C.SERRITELLA	06-OCT-2005
			DRAWN	J.SCHELLPFEFFER	06-OCT-2005
±	±	±	CHECKED	C.SERRITELLA	13-OCT-2005
1. BREAK ALL SHARP EDGES MAX. 2. DO NOT SCALE DRAWING. 3. DIMENSIONS BASED UPON 4. MAX. ALL MACH. SURFACES ✓ 5. DRAWING UNITS: mm			APPROVED	A.PLA-DALMAU	13-OCT-2005
			USED ON		
			MATERIAL	SCINTILLATING POLYSTYRENE	

FERMI NATIONAL ACCELERATOR LABORATORY
UNITED STATES DEPARTMENT OF ENERGY

PPD
MINERVA
TRIANGLE SHAPE

SCALE: AS NOTED	DRAWING NUMBER	SHEET	REV
	9219.000-MB-241845	1 OF 1	A

CREATED WITH : Ideas11NXSeries GROUP: PPD/MECHANICAL DEPARTMENT