DWG. NO.	SDCH048-002

REV	DESCRIPTION	BY DATE	APPD
02	ADDED LOCKING NUT AND REVISED JACK SCREWS	KJ 03/02/04	

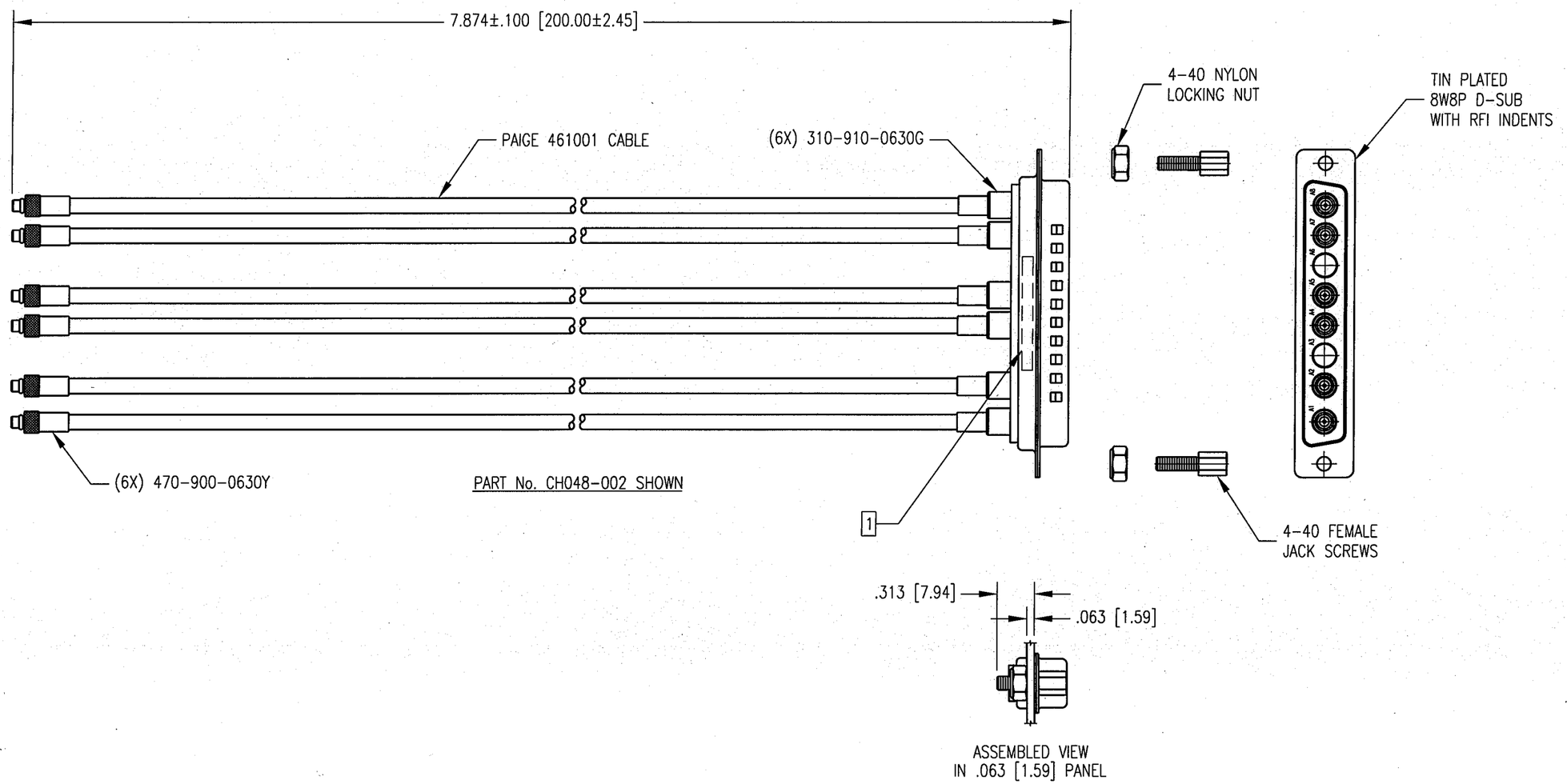

NOTES:
1. MARKED WITH PART No. AND DATE CODE.

PER ASME Y14.5M-1994
UNLESS OTHERWISE SPECIFIED:
DIMENSIONS ARE IN INCHES OR MM / INCHES/MM
TOLERANCES:
DECIMALS .XX ± .01 [0.254]
.XXX ± .005 [0.127]
ANGLES ± 2°
SCALE: 1:1

NORTHROP GRUMMAN
Winchester Electronics
62 Barnes Industrial Road North
Wallingford, CT 06492

CUSTOMER DRAWING

TITLE: FERMILAB 8W8P CABLE HARNESS

DRAWN	DATE	CHECKED	DATE
KJT	02/05/04	TMC	02/18/04
APPROVED	DATE	APPROVED	DATE
WPM	02/19/04	JED	02/19/04

B	SDCH048-002	SHT. 1 OF 1	REV. 02