DWG. NO.

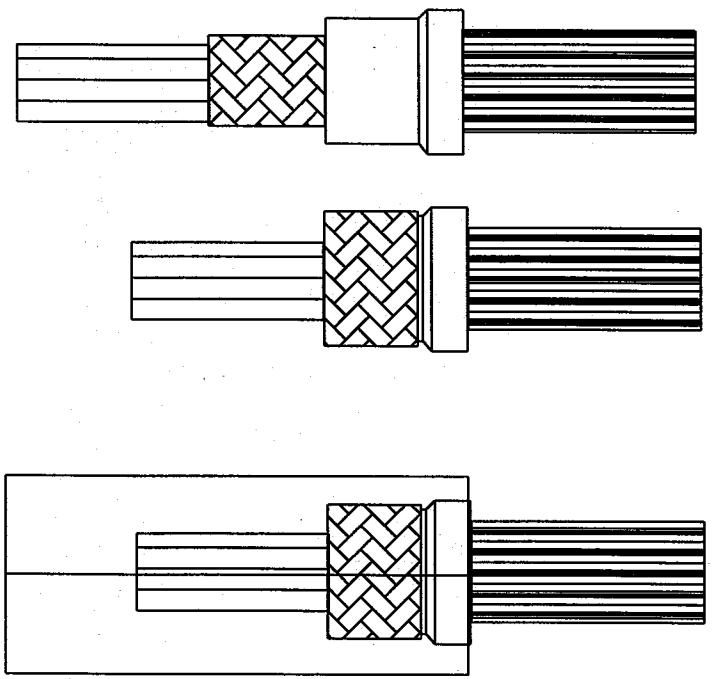

Grommet is slid over braid and shrink tube jacket

Braid is folded back over grommet

Metalized clamshell will clamp over grommet and braid completeing shield.

THIS DRAWING, THE DESIGNS AND IDEAS EMBODIED IN THE DEVICE TO WHICH IT RELATES, AND THE METHOD OF PRODUCING THE DEVICE, ARE THE PROPERTY OF WINCHESTER ELECTRONICS. DIVISION OF LITTON SYSTEMS INCORPORATED AND SHALL NOT BE EMPLOYED, COPIED, OR DISCLOSED TO ANYONE IN ANY MANNER WITHOUT THE CONSENT OF WINCHESTER ELECTRONICS.

REV	ZONE	DESCRIPTION	BY DATE	APPD

PER ASME Y14.5M-1994
UNLESS OTHERWISE SPECIFIED:
DIMENSIONS ARE IN INCHES.
TOLERANCES:
DECIMALS .XX ± .01
.XXX ± .005
ANGLES ± 2°
SCALE:

DIST. CODE

NORTHROP GRUMMAN

Winchester Electronics
400 Park Road
Watertown, CT 06795

MATERIAL

FINISH

DRAWN DATE | CHECKED DATE

APPROVED DATE | APPROVED DATE

TITLE

A

SHT. OF REV.

DRAWING MADE IN THIRD ANGLE PROJECTION

THIS DRAWING IS UNPUBLISHED. RELEASED FOR PUBLICATION .19

© COPYRIGHT 19 BY AMP INCORPORATED. ALL INTERNATIONAL RIGHTS RESERVED.

LOC	DIST
BD	48

REVISIONS

P	F	ZONE	LTR	DESCRIPTION	DATE	APPD
			0	RELEASED	-	-
			A	REVISED PER ECN-2422	9/24/88	SW
			B	REV PER EC 0020-117-93	03/17/93	SB
			B1	ADDED -6,-7,-8 PER NPR 4841	07/05/93	MW
			C	REV PER EC 0020-309-95	05/01/95	JS
			D	REV PER EC 0020-881-95	25 AUG 95	JS
			E	OBSOLETE -6 THRU -8 PER EC 0420-141-96	25 SEPT 97	SB
			F	ADDED -9 PER EC 0G40-270-98	20 JUL 98	JK

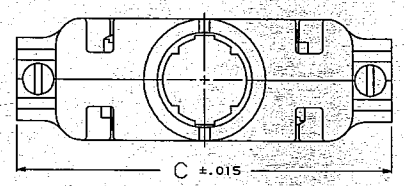

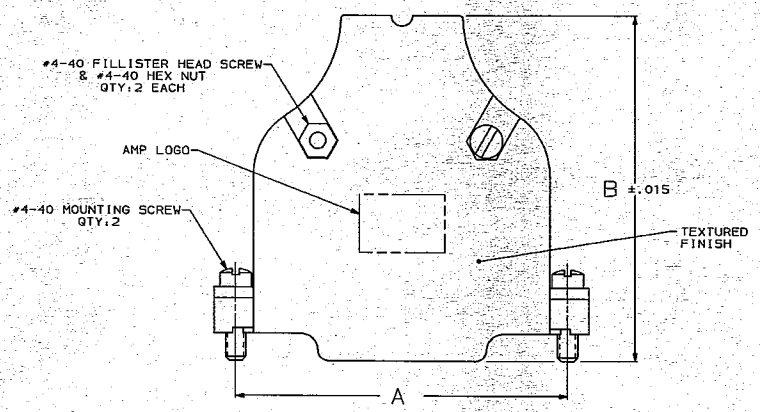

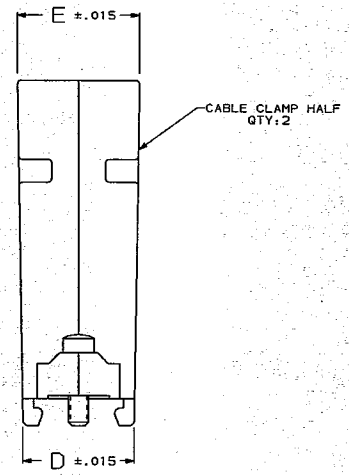

1. PARTS PACKAGED UNASSEMBLED AS A UNIT KIT.
2. CABLE CLAMP HALVES: ZINC ALLOY, FILLISTER HEAD SCREWS, HEX NUTS & MOUNTING SCREWS: STEEL PER ASTM A108, GROMMETS: FLEXIBLE PVC, UL 94V-0 RATED, COLOR: BLACK.
3. CABLE CLAMP HALVES: NICKEL OVER COPPER, FILLISTER HEAD SCREWS, HEX NUTS & MOUNTING SCREWS: ZINC PLATED PER ASTM B633, TYPE III, CLASS SC1, CLEAR CHROMATE.

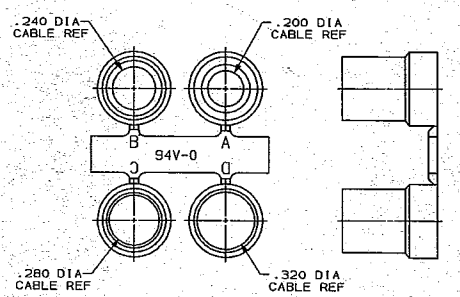

GROMMET ASSORTMENT
FOR SIZES 1 & 2 ONLY

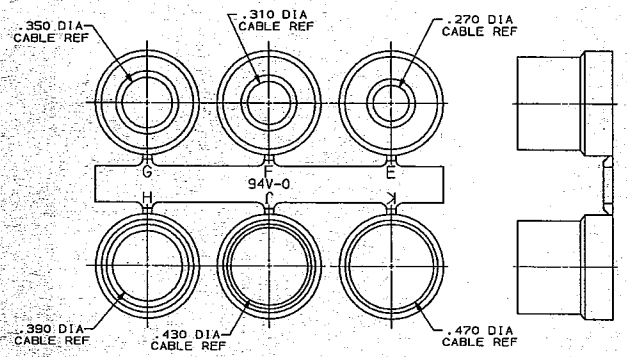

GROMMET ASSORTMENT
FOR SIZES 3, 4 & 5 ONLY

	BULK PACK	.680	.620	2.090	1.920	1.852	3	748676-9
OBSOLETE	SMALL PACK	.680	.620	2.090	1.920	1.852	3	748676-8
OBSOLETE	SMALL PACK	.620	.620	1.545	1.910	1.312	2	748676-7
OBSOLETE	SMALL PACK	.550	.620	1.215	1.910	.984	1	748676-6
	STANDARD	.900	.730	2.644	1.920	2.406	5	748676-5
	STANDARD	.800	.620	2.738	1.920	2.500	4	[redacted]
	STANDARD	.680	.620	2.090	1.920	1.852	3	748676-3
	STANDARD	.620	.620	1.545	1.910	1.312	2	748676-2
	STANDARD	.550	.620	1.215	1.910	.984	1	748676-1
	PACKAGING	E	D	C	B	A	SIZE	PART NO

DO NOT SCALE PRINT. UNLESS SPECIFIED DIMENSIONS IN INCHES TOLERANCES ON . 2 PLC DEC ± - 3 PLC DEC ± .005 ANGLES ± -

MATERIAL 2

FINISH 3

DR 5/4/88 S.WELDON
CHK 5/4/88 W.G.LENKER
APPD 5/6/88 R.WHYNE
APPD 5/6/88 V.KUMAR
PRODUCT SPEC -
APPLICATION SPEC -
WEIGHT -

AMP | AMP INCORPORATED Harrisburg, Pa. 17105

NAME KIT, CABLE CLAMP, 180° EXIT, W/GROMMETS, AMPLIMITE™

SIZE D | FSCN NO 00779 | DRAWING NO 748676

SCALE 3:1 | SHEET 1 OF 1

CUSTOMER DRAWING

AMP 1750-3 REV 3-87

20-JUL-98 13:05:55 ampl1676 /home/ssrv026d/dsk04/dept4023/ampl1676/sdpwpd