THIS DRAWING IS UNPUBLISHED. RELEASED FOR PUBLICATION ,19 .
© COPYRIGHT 19 BY AMP INCORPORATED. ALL RIGHTS RESERVED.

LOC	DIST
AD	47

REVISIONS

P	LTR	DESCRIPTION	DATE	DWN	APVD
	K	REVISE PER ECN 0U1B-0328-00	01DEC00	SU	RP

1. MATERIAL: HOUSING: POLYESTER. COLOR: GRAY. CONTACT: PHOSPHOR BRONZE.
2. FINISH: CONTACT MATING AREA: 1.27µm MIN GOLD PLATE, ACTION PIN AREA: 0.5µm MIN TIN LEAD PLATE, ALL OVER 1.27µm MIN NICKEL UNDERPLATE.
3. FINISH: CONTACT LUBRICATION WITH BELLCORE APPROVED LUBRICANT. TECHNICAL REFERENCE: TR-NWT-001217 ISSUE 1, SEPT 1992.
4. DIMENSION APPLIES AFTER CONNECTOR IS APPLIED TO P.C. BOARD.
5. RESTRICTED PART NUMBER, CONTACT ENGINEERING.

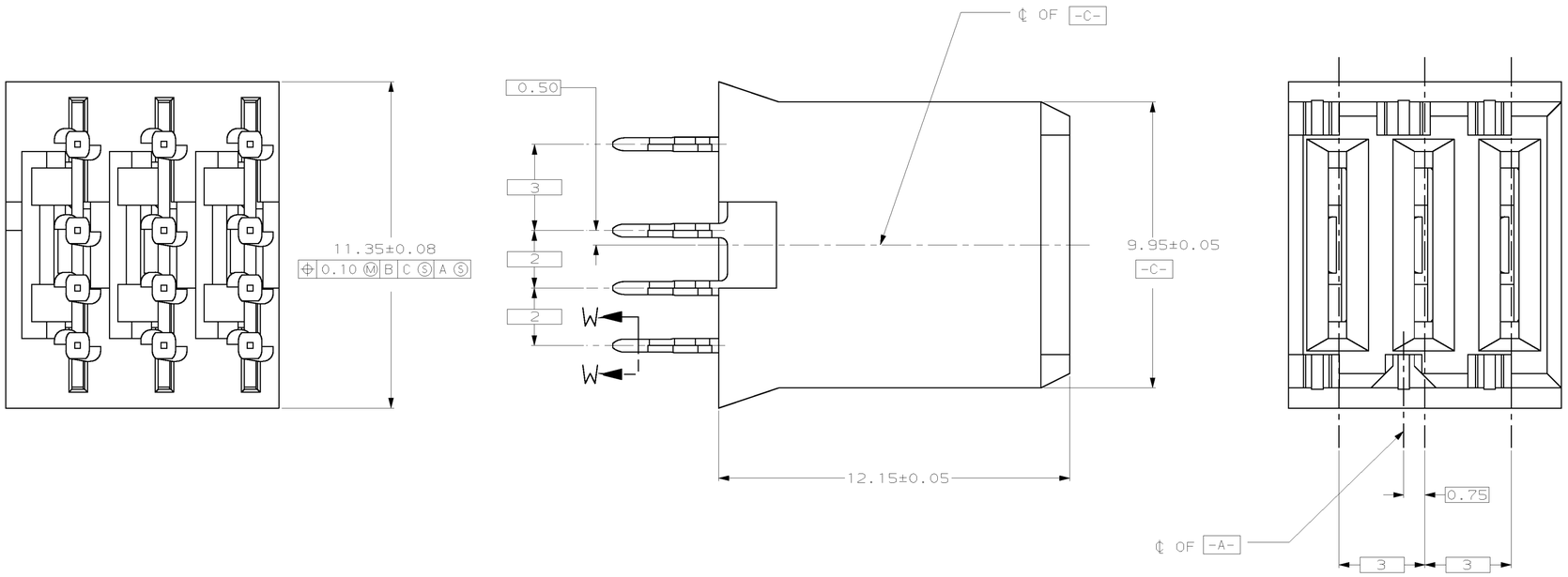

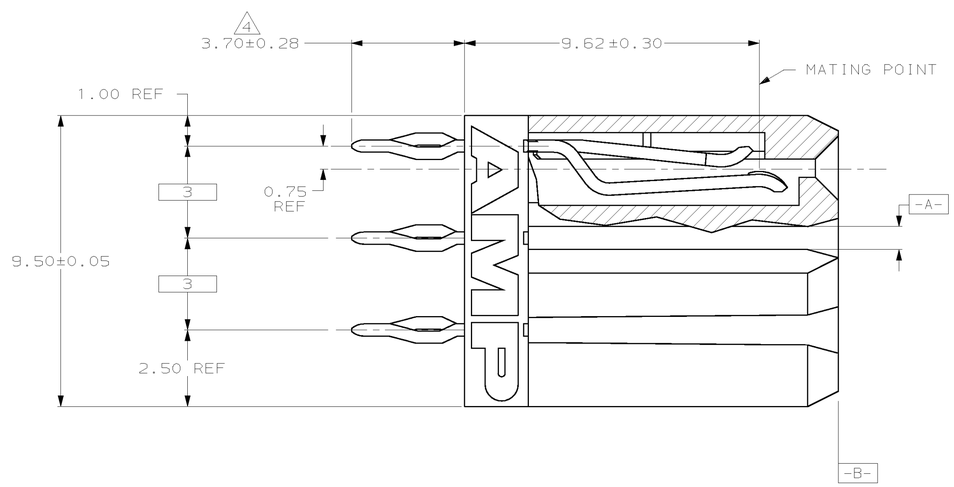

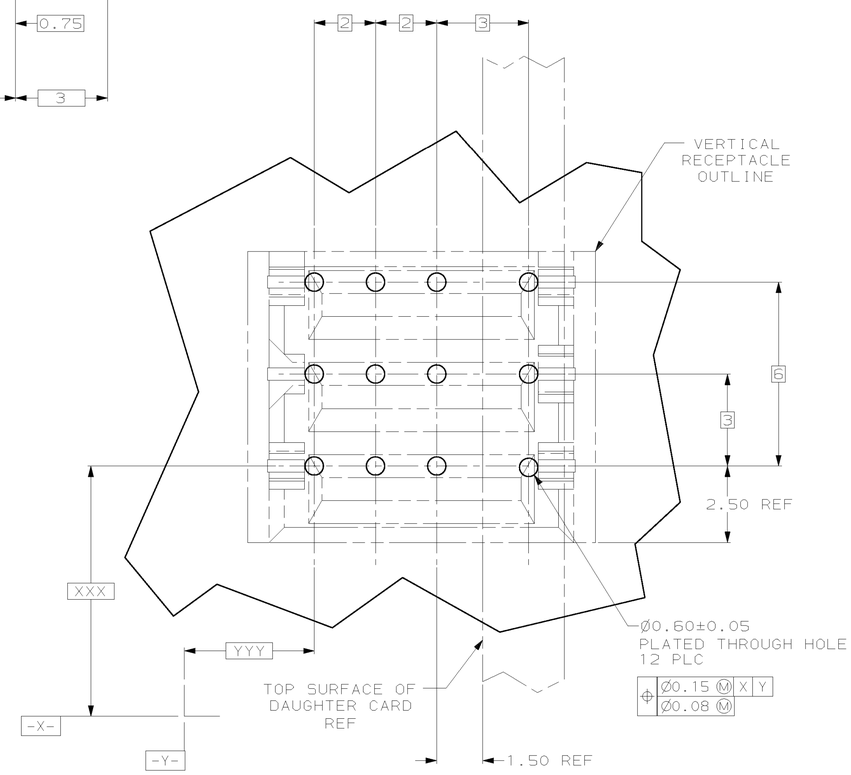

RECOMMENDED PCB HOLE LAYOUT

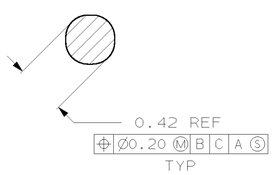

SECTION W-W
SCALE 40:1

5	223955-8
	223955-2
	PART NUMBER

THIS DRAWING IS A CONTROLLED DOCUMENT FOR AMP INCORPORATED. IT IS SUBJECT TO CHANGE AND PCO CONTROLLING ENGINEERING ORGANIZATION SHOULD BE CONTACTED FOR THE LATEST REVISION.

DIMENSIONS: mm

TOLERANCES UNLESS OTHERWISE SPECIFIED:
0 PLC ±-
1 PLC ±-
2 PLC ±0.13
3 PLC ±-
4 PLC ±-
ANGLES ±-

MATERIAL 1
FINISH 2 3

DWN R.BUCHHEISTER 25/JAN/95
CHK D.ZITSCH 25/JAN/95
APVD D.SINISI 25/JAN/95
PRODUCT SPEC —
APPLICATION SPEC —
WEIGHT —

AMP Incorporated
Harrisburg, PA 17105-3608

NAME ASSEMBLY, VERTICAL RECEPTACLE, UNIVERSAL POWER MODULE

SIZE	CAGE CODE	DRAWING NO
A1	00779	C-223955

CUSTOMER DRAWING

SCALE	SHEET	OF	REV
10:1	1	1	K

AMP 4805 REV 10/93