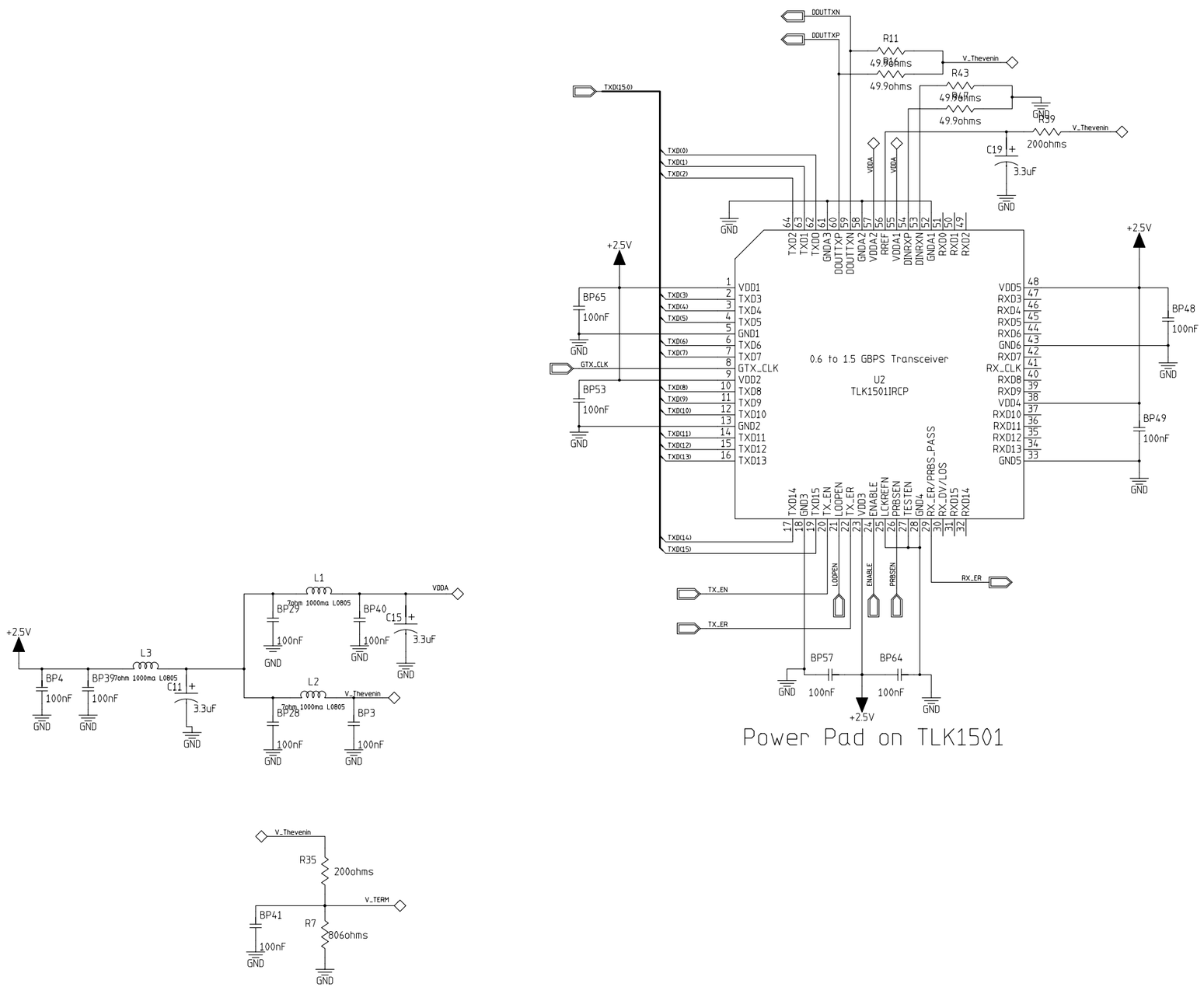

MODFIED 4/28/2005 11:32:59 AM			
EED Department	ORIGINATOR	T. Shaw	DATE date
	DRAWN	T. Shaw	DATE 1/4/2005
	CHECKED	checked	DATE date
	APPROVED	approved	DATE date

Fermi National Accelerator Laboratory
United States Department of Energy

D:\Angie\TX_MEZZ\TX_MEZZ.prj

SIZE	DRAWING NUMBER		REV
D	173561	Schematic Page 01 of 01	A

H=BND. V=4LA