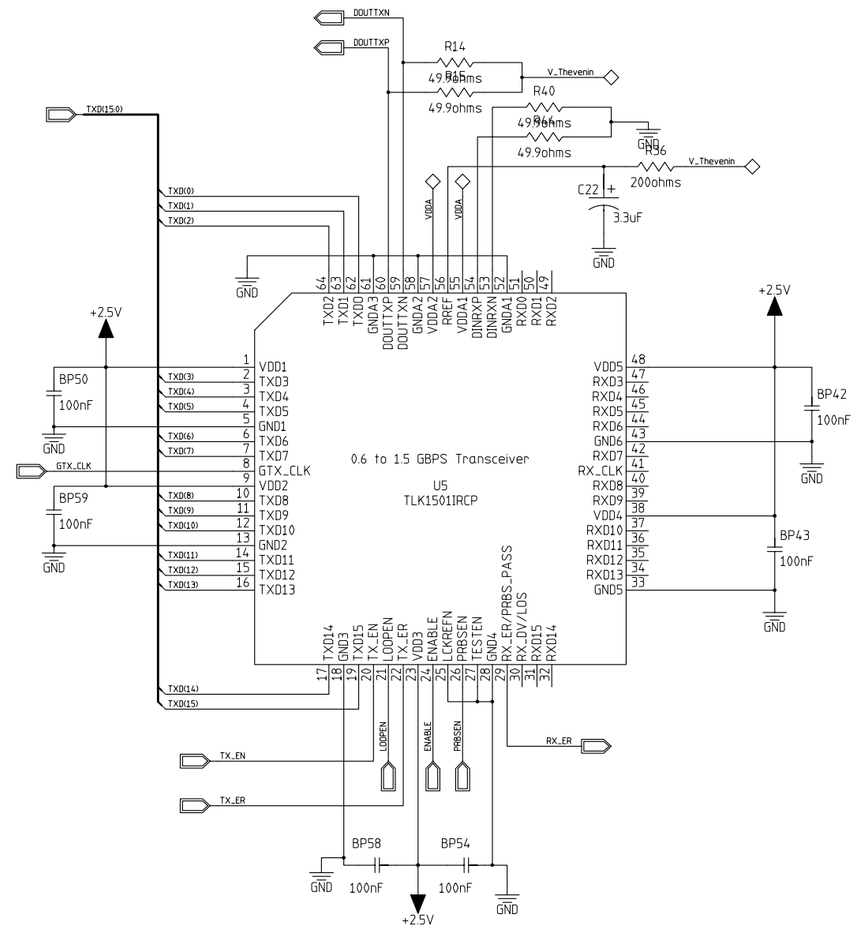


Power Pad on TLK1501

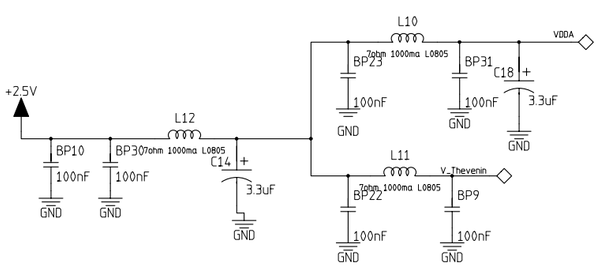


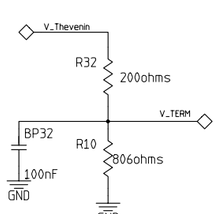


| | | | |
|---|---|---|---|
| MODFIED 4/28/2005 11:32:59 AM | | | |
| EED Department | ORIGINATOR | T. Shaw | DATE date |
| | DRAWN | T. Shaw | DATE 1/4/2005 |
| | CHECKED | checked | DATE date |
| | APPROVED | approved | DATE date |

Fermi National Accelerator Laboratory
United States Department of Energy

D:\Angie\TX_MEZZ\TX_MEZZ.prj

| SIZE | DRAWING NUMBER | | REV |
|---|---|---|---|
| D | 173561 | Schematic Page 01 of 01 | A |

H=BND. V=4LA